MAKELSAN®

Uninterruptible Power Supplies

Complete Power Solutions

PRODUCT CATALOGUE

POWER FOR LIFE

index

COMMITMENT TO POWER QUALITY AND INNOVATION

AT MAKELSAN, WE ARE COMMITTED TO PROVIDE COMPLETE ENERGY SOLUTIONS THAT GUARANTEE POWER QUALITY FOR ALL CRITICAL APPLICATIONS. THE FIRST CLASS MANUFACTURING FACILITY HEADQUARTERED IN ISTANBUL, WHERE EUROPE AND ASIA MEET, IS ONE OF THE FASTEST-GROWING METROPOLITAN ECONOMIES IN THE WORLD, WE ARE PROUD TO KEEP INVESTING IN TECHNOLOGY AND PRODUCTION AND WE PROVIDE HIGH QUALITY WITH FAST DELIVERY TO OUR WORLDWIDE CLIENTS.

Headquarter Office

A SPECIALIST IN POWER ELECTRONIC

Complete Energy Solutions Provider

LEADING MANUFACTURER OF UNINTERRUPTIBLE POWER SUPPLIES SINCE 1976

Makelsan was founded in 1976 with the aim of designing electrical power systems. Today Makelsan is a leading European brand which manufactures a wide range of high technology Uninterruptible Power Supplies and power quality products from 1kVA up to 6,4MW.

Headquarted in Istanbul, Turkey, Makelsan combines R&D, manufacturing, global sales and aftersale service processes with more than 300 qualified professionals in a fully modernized 20.000 sqm factory equipped with state-of-art machinery.

Makelsan product range varies from Static & Dynamic Uninterruptible Power Supplies, Servo & Static Voltage Regulators to Renewable Energy Products, DC Power Supply, Telecom Equipments, Battery Chargers, Inverters and Datacenter Solutions.

With more than 20 area sales and service offices, 300 resellers in Turkey, over 100 global distributors worldwide and over 40 years experience in design, manufacturing and distribution in the power supply industry, Makelsan is committed to provide complete energy solutions that guarantee power quality for all kinds of critical applications.

Istanbul Headquarter & Factory

Largest Uninterruptible Power Supply Production Facility

Makelsan products are manufactured in Istanbul factory which is the largest UPS production facility of the region and all production process is monitored and developed according to ISO 9001 Quality Control System.

KEY FIGURES

42
years in the power industry

80
countries across the 6 continents

20.000
sqm production facility

10%
of turnover invested in R&D

300
certified support engineers through global service network

5000
units of 3 phase Ups per year

Advanced Manufacturing

- 42 years experience in power electronic
- More than 300 employees, first-class manufacturing facilities equipped with state of art machinery and skilled staff.
- 5000 units of 3 phase ups production per year.
- Family owned, sole proprietor company allows to have full control of decisions on the processes.

Innovation & Flexibility

- Committed to develop leading technologies to make sure the customers get innovative and efficient products.
- Continuous investment in R&D (10% of turnover).
- Flexibility of customizing solutions, which makes the product easy to adapt to the customer requirements.

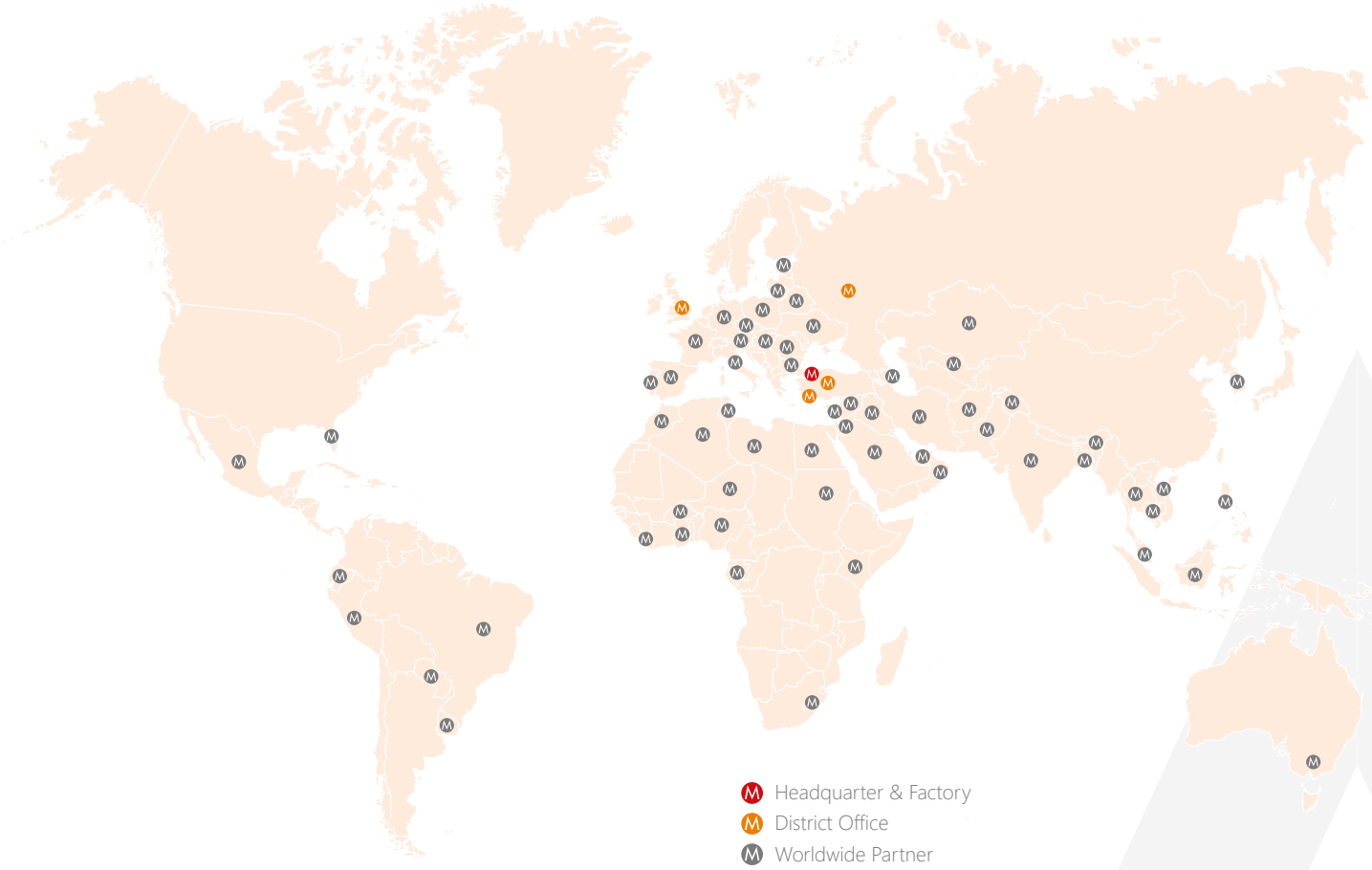

Global Sales & Distribution Network

- Export to more than 80 countries across the 6 continents.
- 4 subsidiaries in Europe.
- More than 100 global distributors.
- Over 300 certified support engineers and technicians from our global service network are available to make sure that you have the help you need for your power requirements.

International Standards

All Makelsan UPS sytems complies with EU directives concerning performance, safety, radio frequency emissions, electromagnetic compatibility (EMC), voltage peaks, over voltage and static charges.
EN 62040-1:2008.

R&D Test Laboratory

Factory Production Plant

OUR VALUES

Innovation and Continuous Improvement

WORLD-CLASS R&D TO DEVELOP LEADING TECHNOLOGIES

Thanks to its world-class research and development center, Makelsan constantly innovates its product portfolio and ensure the customer's benefit through development and improvement of leading technologies.

Makelsan R&D is committed to meet global standards for technology and focuses on designing products that:

- Secures high quality power supply for any critical application.
- Are environment-friendly.
- Ensure comfort and customer satisfaction.
- Are affordable and comply with standards of the future.

> INNOVATION, QUALITY AND ECO-FRIENDLY PRODUCTS ARE THE FOUNDATION OF OUR BUSINESS APPROACH

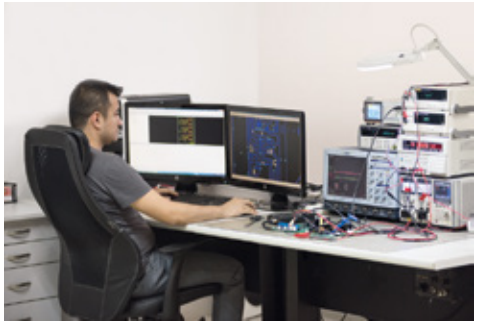

R&D Center

Designers of Award Winning Power Protection Products

R&D Center in Istanbul is equipped with advance laboratories with sophisticated measuring equipments and real load test rooms. Makelsan R&D was awarded the "Innovation" prize by Turkish Electronics Industry Association (TESİD) in 2014, 2015, 2016 and 2017.

ADVANCED MANUFACTURING

Makelsan keeps investing in production system and improves productivity through the constant control of all processes and development of new technologies in order to achieve its commitment to provide complete energy solutions that guarantee power quality for all kinds of critical applications.

PCB Assembly Facility

Makelsan is equipped with the the latest model SMD (Surface Mount Devices) placement machines which are capable of placing a wide variety of parts. SMT components are placed directly on the surface of a PCB instead of being soldered to a wire lead.

Environment Friendly Solutions

SMART GRID READY UPS SYSTEMS

Makelsan carries out to a policy of protection of its employees, the environment, natural resources, fauna and flora in all of its business activities and operations.
The environmental management system that Makelsan applies, is ISO14001 certified.

Makelsan focuses on R&D efforts that impacts in many aspects the environment:

- Developing new technologies for clean and renewable energy.
- Reducing energy consumption by highest possible operation efficiencies ensuring.
- Better performances than EU Code of Condunct on Energy Efficiency.
- Compatible UPS systems with today's Smart Grids which is an electricity distribution system that uses digital technology to eliminate waste, improve reliability and optimizes efficiency of the electric grid.

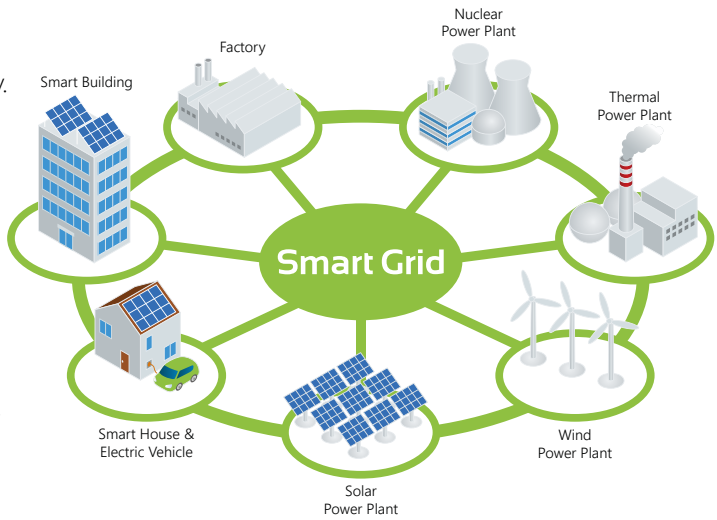

Heat Sink Manufacturing Facility

Makelsan's in-house CNC/VMC machining facility can produce the heat sink profiles to specifically fit its needs to lower the temperature of the electronic devices by dissipating heat into the surrounding air.

Transformer Manufacturing Facility

Makelsan designs and manufactures all kinds of choke coil transformers and wide range of single phase and three phase isolation transformers in house. Low Voltage and High Voltage windings are designed with Copper are Aluminium conductors.

Quality

INTERNATIONAL STANDARDS

Makelsan is committed to produce excellent products which are fully compliant with international standards and provide best level of service in both pre-sales and after sales periods to achieve highest level of customer satisfaction.

Makelsan is proud to have achieved the very highest of international standards in Quality Management, Environment Management in Occupational Health & Safety, Production, Local Compliances and continues to implement these practices for the benefit of employees, customers, suppliers and communities the company operate in.

MANAGEMENT

nqa. ISO 9001 Registered · nqa. ISO 14001 Registered · nqa. ISO 18001 Registered · TSE-HYB

PRODUCTS

TÜV SÜD · BUREAU VERITAS Certification · TSE · CE · UL

LOCAL APPLIANCE

PG · SONCAP CERTIFIED

ENVIRONMENT

Higher Level of Efficiency than the EU CoC for AC Ups

HOME & SMALL OFFICE SOLUTIONS

• Makelsan offers many UPS products to secure power protection for computers, networks, routers/modems, external storage devices, game consoles and other critical electronics in your home office or small business and keep you connected.

• With the rise of entertainment systems, expensive households with multimedia and critical electronics, the users require ever higher protection from power outages and higher quality power supply.

• Surges, frequency variations and power disturbances are amongst the potentially damaging threats that you would not normally be protected against in your electricity supply. Makelsan offers a range of home and small office UPS systems to suit every budget and application.

REFERENCES

Turkey
Burger King Chain Restaurants
Dominos Pizza Chain Restaurants
Swiss Hotel The Bosphorus
Darty
Poland
Cinema City
Polonus
Russia
Sheraton Hotel
UAE
Group 4 Securitas Emirates LLC
South Africa
City Hall JHB
Azerbaijan
ISR Plaza

APPLICATIONS

- Personal Computers
- Entertainment Systems
- Routers/Modems
- External Storage Devices
- Game Consoles
- POS Systems

SECTOR REQUIREMENTS

- Protection for surges and power disturbances
- Easy installation and small footprint
- Low noise in the workplace and home
- Managability via USB, LCD display, audible alarms
- Energy saving

PowerPack SE
1-3 kVA

PowerPack SE RT
1-3 kVA

PowerPack SE
6-10 kVA

MEDICAL
SOLUTIONS

• In line with increasing level of technology, digital medical equipments become one of the unique devices for healthcare centers. Medical equipments and mission-critical IT systems demand high quality and reliable power. Therefore the Uninterrupted Power Supply to such vital equipments must meet specific features to ensure service continuity.

• Makelsan UPS systems maximize the reliability, safety and performance of sensitive medical equipment by protecting against common power problems that cause costly downtime, equipment damage and data loss.

REFERENCES

Germany
Pharmaserv GmbH & Co. KG
KZBV Kassenzahnärztliche Bundesvereinigung
Egypt
GE Healthcare
Social Insurance Ministry
Toshiba Medical Technology
Siemens
Mexico
Military Hospitals of the Secretary of Defense
Ecvador
Hospital Militar Quito
Russia
Municipal Central Hospital, Mozdok
Hungary
Phoenix Pharma, Zalaegerszeg
Dr. Kenesei Albert Hospital, Balassagyarmat
Tunisia
Amen Santé Gafsa Hospital

APPLICATIONS

- Hospitals
- Operating Theatres
- Clinics

SECTOR REQUIREMENTS

- High quality power supply in compliance with standards
- Safety of patients and equipments
- Optimizing energy consumption
- Availability for IT systems
- Flexibility to upgrade safely for future power requirements

PowerPack SE RT 1-3 kVA | PowerPack SE 1-10 kVA | LevelUps 10-1000 kVA | LevelUps T3 10-200 kVA

DATA CENTER SOLUTIONS

• Uninterruptible services and business continuity are critical to today's data center and IT facilities. To achieve this, a clean and secure supply of power are the key factors.
Any power failure can have a devastating impact on mission-critical computers, communications and data, resulting in costly downtime.
• Makelsan provides cost-effective, highly reliable, uninterrupted power to ensure mission-critical operations continue to process and export data.

REFERENCES

Turkey
Vodafone
Turkiye Is Bankasi
Alcatel
Siemens
Germany
Alliance Healthcare Deutschland AG
Italy
Telecome Italia
Azerbaijan
Bank Standard
Tunisia
A.T.I Tunisian Internet Agency
Belarus
Beltelecom
Ecuador
Banco Guayaquil

APPLICATIONS

- Data Centers
- Server Farms
- IT & Telecommunications
- Banks and Insurance Companies

SECTOR REQUIREMENTS

- Reducing energy consumption
- High system availability according to tier standard
- Optimising the physical space
- Reduction of total cost of ownership


Boxer
10-120 kVA


LevelUps
10-1000 kVA


LevelUps T3
10-200 kVA


PM
10-1000 kVA


DC
Solutions

INDUSTRY
SOLUTIONS

• Reliable power supplies are crucial to ensure the continuous availability of power and safe operations for all types of critical applications in the harshest industrial environments like oil & gas, water, power generation, petrochemical, pharmaceutical, food & beverage, automotive and many manufacturing processes.

• Any downtime/breakdowns, unstable voltage and frequencies can cause important damages and the whole facility to be shut down as well as leading serious financial impacts. Makelsan's industrial power solutions protect from any downtime and deliver high precise power supplies.

REFERENCES

Turkey
Arcelik • Beko • Pinar Food & Beverage
Kroman Steel • Milangaz
United Kingdom
GE Oil & Gas
EON
Germany
Trelleborg Sealing Solutions Germany GmbH
Azerbaycan
Socar Gas Pipeline • Baku Brick Factory
Tunisia
Sumitomo Automotive Factory
Poland
Soudal PU-Foams and Adhesives
Belarussia
Gomel Glass Factory
Pakistan
Nestle Sheikhupura Factory
Ecuador
Consorcio Beta Oil
Nigeria
Landtrain Furniture

APPLICATIONS

- Manufaturing Processes
- Oil and Gas
- Power Generation
- Water Treatment

SECTOR REQUIREMENTS

- Customisable design to get the UPS adapted for various operating and environment condititions
- Increased robustness for resisting mechanical stress
- Easy integration into industrial networks
- Energy efficiency


Boxer
10-120 kVA


LevelUps
10-1000 kVA


LevelUps T3
10-200 kVA


DC
Solutions

TRANSPORTATION SOLUTIONS

- Makelsan offers a comprehensive range of railway solutions that have a high level of resilience and reliability under all environmental conditions and high levels of compatibility with stringent mechanical standards (vibrations, structural resistance).
- Makelsan's transformer-less and transformer based products with adaptability to different power sources (single-phase, three-phase, with or without neutral) are able to meet the most complex requirements.

REFERENCES

Turkey
Marport
Dunya Yachts
Pegasus Airlines
Antalya Airport
DB Schenker Arkas
CAF Signalling Systems
Germany
Hessen Mobile, Eschwege Tunnel Control Center
Spain
Ferrovial Highway M-40 Tunnel, Madrid
France
Marseille L2 Bypass Road
Tunisia
SNCFT Tunisian Railways

APPLICATIONS

- Railways
- Airports
- Toll Roads
- Marinas

SECTOR REQUIREMENTS

- Securing the power supply to control and monitoring systems
- Adaptability to different environments
- Flexibility of power source
- Robust structure
- Compatibility with mechanical standards

Boxer
10-120 kVA

LevelUps
10-1000 kVA

LevelUps T3
10-200 kVA

PM-RW
10-1000 kVA

DC
Solutions

EMERGENCY SOLUTIONS

• Makelsan's emergency power solutions ensure energy supply to emergency lighting in the event of mains supply failure. They are suitable for other essential safety equipments, such as:

• Automatic fire extinguishing systems
• Smoke extraction equipments
• Alarm units and emergency detection systems
• Carbon monoxide detection systems
• Specific safety systems in sensitive high risk areas.

REFERENCES

Turkey
Sinan Erdem Sport Complex
Sabiha Gokcen Airport
City's Shopping Mall
United Kingdom
Cardiff Airport
HM Treasury, London
Westminster City Hall
Italy
University of Messina
Russia
Fisht Olympic Stadium, Sochi
Domodeva City Ovartal Shopping Center
Azerbaijan
Presidential Palace

APPLICATIONS

- Airports
- Stadiums and Sports Centres
- Railways and Bus Stations
- Schools and Universities
- Hospitals
- Shopping Centers
- Cinemas and Theatres
- Museums
- Public Buildings
- Office Buildings
- Hotels

SECTOR REQUIREMENTS

- Compliance with regulatory EN 50171
- Galvanic isolation of input/output (Optional)
- Advanced diagnostics and interface for emergency system
- High short circuit current
- Battery charging time: 80% in 12 hours


Boxer (Central Supply Systems)
10-120 kVA


LevelUps
10-1000 kVA


LevelUps T3
10-200 kVA


PM
10-1000 kVA


DC
Solutions

LEVELUPS
SERIES

10-1000 kVA 3:3 PHASE
ONLINE UPS

DATA CENTER | MEDICAL | TRANSPORT | INDUSTRY | EMERGENCY

Three LEVEL 3 UPS

kW=kVA

96% Efficiency

VFI TYPE — UPS ONLINE

TOWER

PF= 1.0 — POWER FACTOR

Service — SERVICE

HIGHLIGHTS

- True Three Level Rectifier and Inverter Technology
- Ultra High Energy Efficiency
- Full Rated Power Factor kW=kVA

Innovative 3 Level Technology

- LevelUps Series with Innovative 3 Level Technology is a true on-line double conversion, three-phase UPS system that provides one of the highest level energy efficiencies in the industry.
- Three level inverter & rectifier design LevelUps Series brings the newest power conversion technology and delivers efficiency up to 96% at 50-75% load operation which is the most common operating range.

CERTIFICATES

TÜV SÜD — The *LevelUps Series* is certified by TÜV SÜD with regard to product safety (EN 62040-1)

BUREAU VERITAS Certification — The *LevelUps Series* is attested by Bureau Veritas with regard to performance (EN 62040-3)

CE PG TSE

Higher Level of Efficiency than the EU CoC for AC Ups

High Efficiency & Low Total Cost of Ownership

- Less energy consumption to supply the loads thanks to high efficiency up to %96.
- Reduced energy loss.
- Reduced electricity usage and air conditioning requirements.
- Reduction in operating cost of UPS.
- IGBT based power factor correction technology provides input power factor close to 1 (≥ 0,99). The high input power leads to reduced electricity pay-out, minimizes cable, switchboard, fuse and generator requirements, thus reducing investment cost.
- Low input current total harmonic distortion (THDi) less than%3 helps to avoid the disturbance and expensive harmonic filters.
- Small footprint and easy maintenance

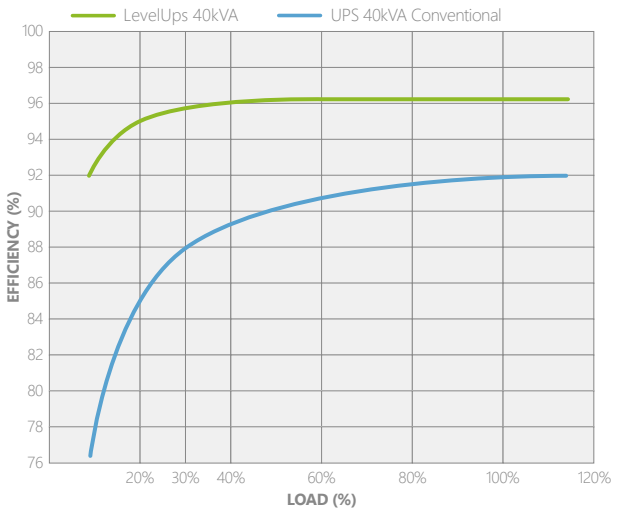

High Output Power Factor 1

- Output power factor of 1 (kVA=kW) rate provides up to 25% more active power than a traditional UPS.
- Suitable for modern power supply application with unit or capacitive power factor (e.g. new servers generation).
- No reduction in active power from 0,9 leading to 0,9 lagging.

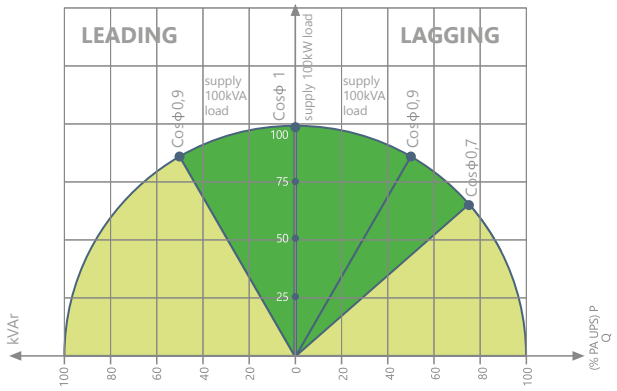

LevelUps Output Power Factor Scheme

Maximum Availability

- Parallel configuration up to 8 units per redundancy (N+1) and power increase.
- Loop connection helps the UPS system to continue the operation when the connection cable is inturrupted.

Standard Electrical Features

- Dual Input
- Common Battery
- Backfeed Protection
- Cold Start (Optional)
- Advanced Battery Management
- Short Circuit and Overload Protection
- Parallel Ready
- Redundant Power Supply
- Power Walk-in for Progressive Rectifier Start-up when the Mains is Restored.
- Battery Temperature Sensor
- Overload and Short Circuit Protection
- Static and Manual Bypass Operation

Advanced Communication Features

- 500 Real Time Event Log with Detailed Parameters
- User Friendly Multilingual 320x240 Graphic Display Provides Operation Information
- Monitoring and Shutdown Software
- RS232 Serial and RS485 Ports
- Modbus RTU (Optional)
- 2 Communication Slots
- Remote Emergency Power Off (Optional)
- Remote Display Panel (Optional)
- Dry Contact (Optional)
- SNMP (Optional)
- ProfiBUS (Optional)

Flexibility

- Temperature sensor for external battery cabinets for extended runtimes.
- External battery cabinets for different sizes of batteries to provide extended runtimes.
- Different sizes of 10-40kVA cabinets for larger capacity of internal batteries when long autonomy times are required.
- 3/1 Phase version is available for 10-30kVA power ratings
- Frequency converter mode.
- Isolation transformers to vary neutral connectivity in the event of separate power sources or for galvanic isolation between input and output.
- Compatible version with EN 50171 for supplying power to emergency lighting systems.

DETAILS

LEVELUPS SERIES 10-40 kVA
LEVELUPS SERIES 60 kVA (Power Factor 0.9)

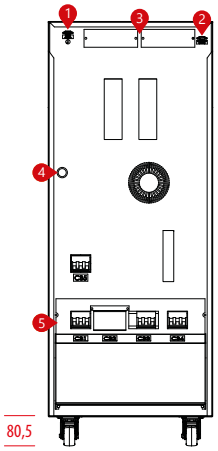

Rear Panel

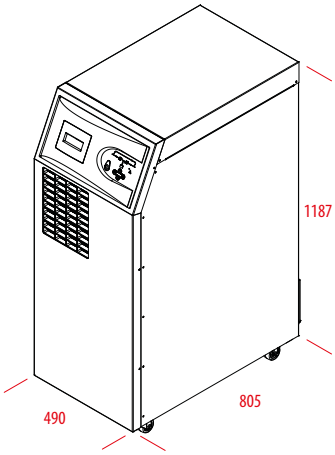

1. Parallel Port Terminal
2. RS232 Terminal
3. Optional Card Slots
4. DC Bus Ramping Up Button
5. Switch

LEVELUPS SERIES 60-80 kVA

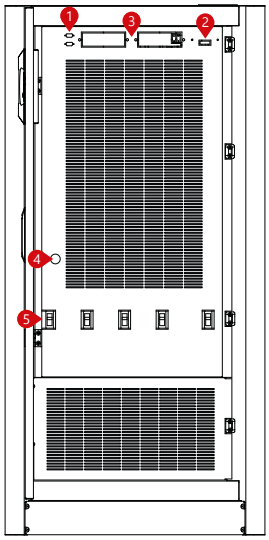

Front Panel

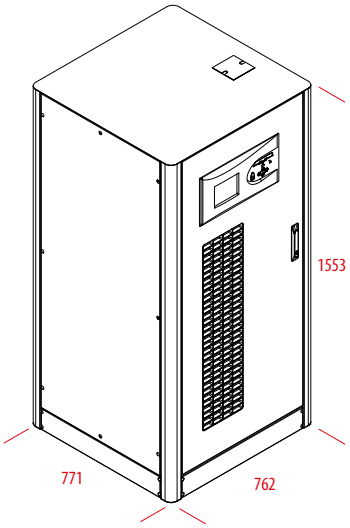

1. RS232 Terminal
2. External Temperature Sensor Output
3. Optional Card Slots
4. DC Bus Ramping Up Button
5. Switch

LEVELUPS SERIES 100-120 kVA

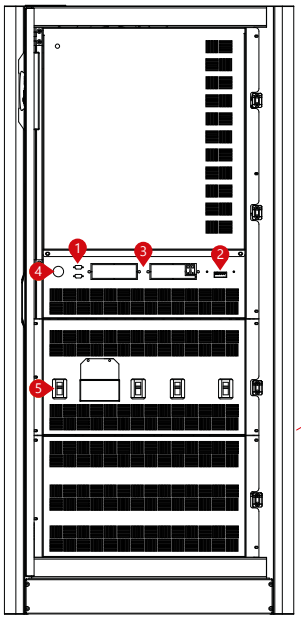

Front Panel

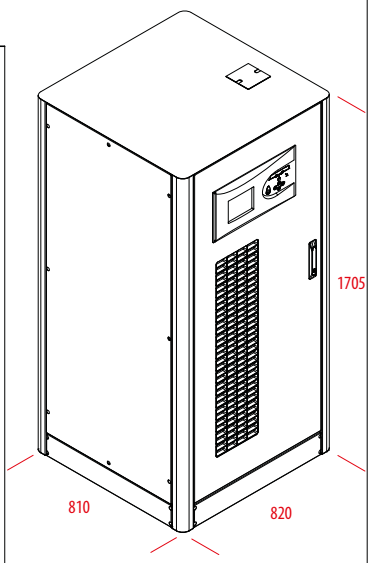

1. RS232 Terminal
2. External Temperature Sensor Output
3. Optional Card Slots
4. DC Bus Ramping Up Button
5. Switch

LEVELUPS SERIES 160-200-250 kVA

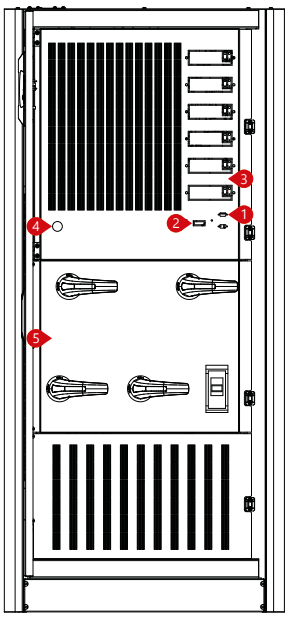

Front Panel

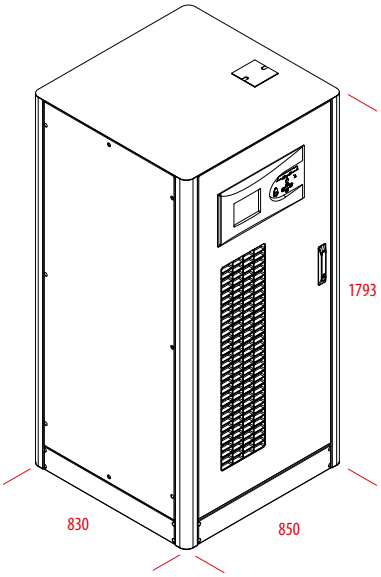

1. RS232 Terminal
2. External Temperature Sensor Output
3. Optional Card Slots
4. DC Bus Ramping Up Button
5. Switch

DETAILS

LEVELUPS SERIES 300-400-500 kVA

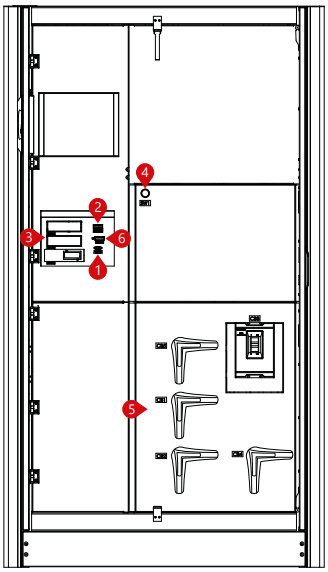

Front Panel

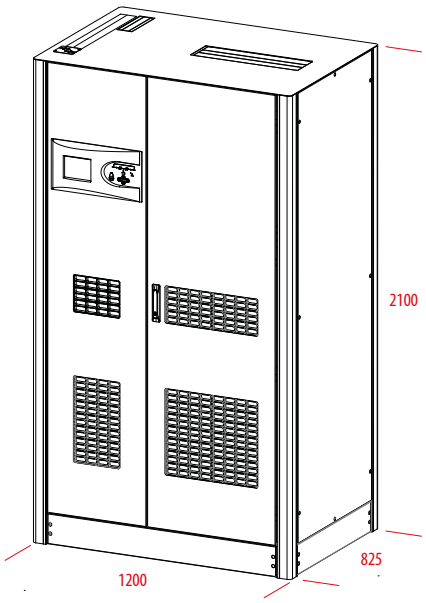

1. RS232 Terminal
2. External Temperature Sensor Output
3. Optional Card Slots
4. DC Bus Ramping Up Button
5. Switch
6. Optional Modbus

LEVELUPS SERIES 600-800-1000 kVA

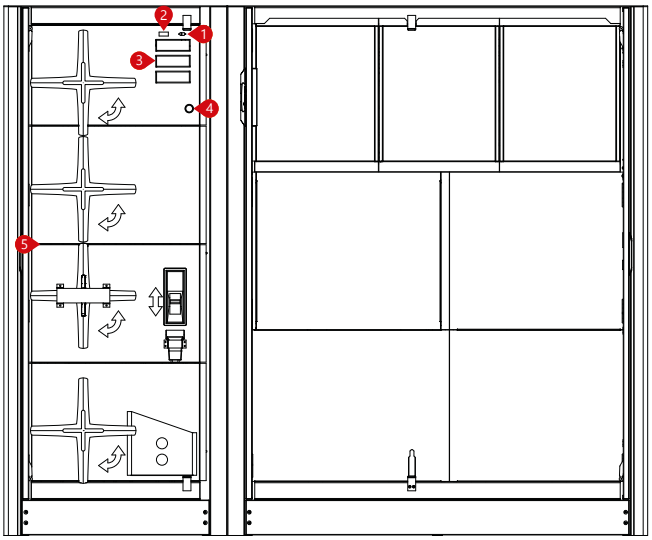

Front Panel

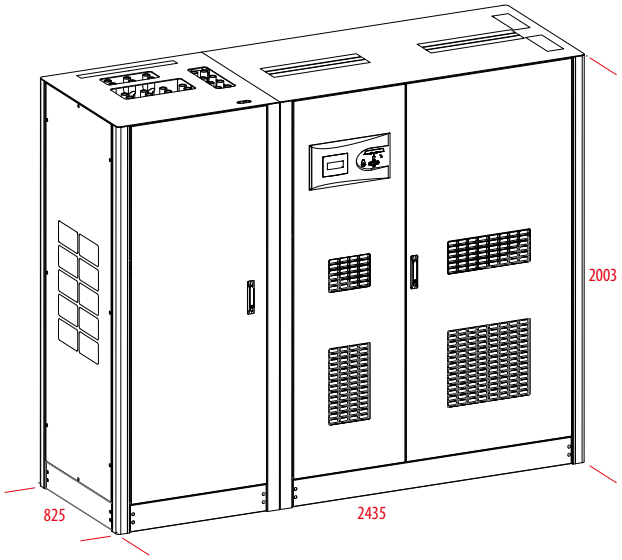

1. RS232 Terminal
2. External Temperature Sensor Output
3. Optional Card Slots
4. DC Bus Ramping Up Button
5. Switch

MODEL																			
Capacity		10kVA	15kVA	20kVA	30kVA	40kVA	60kVA	80kVA	100kVA	120kVA	160kVA	200kVA	250kVA	300kVA	400kVA	500kVA	600kVA	800kVA	1000kVA
Power Watt		10kW	15kW	20kW	30kW	40kW	60kW	80kW	100kW	120kW	160kW	200kW	225kW	270kW	360kW	450kW	540kW	720kW	900kW
INPUT																			
Nominal Voltage		380/400/415 VAC 3 Phase +N (Optional 220/380 VAC -37% +22% 3P+N+PE)																	
Voltage Tolerance		-20% +15%																	
Frequency Tolerance		50 / 60 Hz ±10% (Selectable)																	
Power Factor		>0.99																	
Total Harmonic Distortion		THDi <%3																	
OUTPUT																			
Power Factor		1.0											0.9 (1 Optional)						
Nominal Voltage		380/400/415 VAC 3 Phase + N																	
Voltage Tolerance		Static ±1, Dynamic ±3																	
Frequency Tolerance		50Hz / 60Hz ±0,01% (Battery Mode)																	
Output THD		Linear Load <1% / Non-Linear Load <3%																	
Crest Factor		3:1																	
Overload Capacity*		At 125% Load 10min, at 150% Load 1min																	
Efficiency (Online Mode)		96%																	
Efficiency (Eco Mode)		Up to 99%																	
BYPASS																			
Nominal Voltage		380/400/415 VAC 3 Phase + N																	
Voltage Tolerance		15% (Configurable from 10% to 30%)																	
Frequency Tolerance		±5 (Selectable)																	
BATTERY																			
Type		VRLA / GEL																	
Quantity (12V DC VRLA)		60																	
Charge Capacity		12,5% of Active Power (Nominal 0,1 C10, Adjustable)																	
Recharge Time		6-8 hours																	
Internal Battery		60 x 7Ah or 9Ah					External Battery Pack												
ENVIRONMENT																			
Running Temperature		For UPS 0°C~40°C For Battery 0°C~25°C																	
Storage Temperature		For UPS 15°C~45°C For Battery -10°C~60°C																	
Protection Class		IP20																	
Humidity		0-95% Without Condensation																	
Altitude		<1000m, Correction Factor 1. <2000m, Correction Factor >0.92, <3000m; Correction Factor >0.84																	
Noise Level		<53 dBA		<55 dBA		<60 dBA		<65 dBA			<72 dBA					<74 dBA			<75 dBA
COMMUNICATION																			
Communication Port		RS232 Standart, RS485 and SNMP Adapter Option																	
STANDARDS																			
Quality		ISO 9001, ISO 14001, ISO 18001, TSE-HYB																	
Performance		EN62040-3 (VFI-SS-111, Bureau Veritas Certified)																	
EMC/LVD		EN62040-2, EN62040-1, EN60950, (TÜV SÜD Certified)																	
DIMENSIONS & WEIGHT																			
Cabinet Dimensions (mm)	Width	490					763		810		830			1250			2345		
	Depth	805					771		820		870			845			485		
	Height	1190					1555		1705		1800			2102			2003		
Net Weight (kg)		125	126	131	146	173	323	331	353	368	475	490	553	850	850	850	1740	1740	1990
Packaging Dimensions (mm)	Width	600					900		900		900			1370			2445		
	Depth	900					970		970		970			870			585		
	Height	1400					2040		2040		2040			2120			2250		
Gross Weight (kg)		145	146	151	166	193	353	361	383	398	505	520	583	890	890	890	1820	1820	2070

* under certain conditions.
3 Phase in / 1 Phase Out Version is Available. (10 to 30kVA)

POWER FORLIFE

LEVELUPS T3

SERIES

10-200 kVA

3:3 PHASE

ONLINE UPS

DATA CENTER | MEDICAL | TRANSPORT | INDUSTRY | EMERGENCY

Three LEVEL 3 UPS

kW=kVA

VFI TYPE — UPS ONLINE

TOWER

PF= 1.0 — POWER FACTOR

Service — SERVICE

HIGHLIGHTS

- True Three Level Rectifier and Inverter Technology
- Ultra High Output Galvanic Isolation Transformer Embedded
- Robust and Reliable Design

Highest Reliability with Embedded Isolation Transformer

- LevelUps T3 Series is a true VFI on-line double conversion, three-phase UPS system with Innovative 3 Level Technology and engineered to provide high level of energy efficiency and reliable and robust protection for most demanding industrial and medical environments.
- Three level inverter and rectifier technology and with embedded isolation transformer makes LevelUps T3 Series one of the most reliable systems for data security and other critical applications.

CERTIFICATES

TÜV SÜD — The *LevelUps Series* is certified by TÜV SÜD with regard to product safety (EN 62040-1)

BUREAU VERITAS Certification — The *LevelUps Series* is attested by Bureau Veritas with regard to performance (EN 62040-3)

CE PG TSE

Compact Design

- Designed with an Integrated transformer ensuring galvanic isolation on the output for ultimate safe installation.
- Easy to install and service and can be integrated into harsh commercial and industrial environments.
- Compact footprint and matching battery cabinets.

Low Total Cost of Ownership

- Less energy consumption to supply the loads thanks to high efficiency.
- Reduced energy loss.
- Reduced electricity usage and air conditioning requirements.
- Reduction in operating cost of UPS.
- IGBT based power factor correction technology provides input power factor close to 1 (≥ 0,99). The high input power leads to reduced electricity pay-out, minimizes cable, switchboard, fuse and generator requirements, thus reducing investment cost.
- Low input current total harmonic distortion (THDi) less than%3 helps to avoid the disturbance and expensive harmonic filters.
- Small footprint and easy maintenance

High Output Power Factor 1

- Output power factor of 1 (kVA=kW) rate provides up to 25% more active power than a traditional UPS.
- Suitable for modern power supply application with unit or capacitive power factor (e.g. new servers generation).
- No reduction in active power from 0,9 leading to 0,9 lagging.

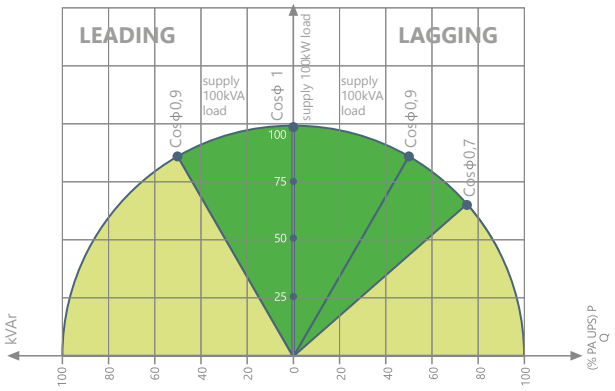

LevelUps Output Power Factor Scheme

Maximum Availability

- Parallel configuration up to 8 units per redundancy (N+1) and power increase.
- Loop connection helps the UPS system to continue the operation when the connection cable is inturrupted.

Standard Electrical Features

- Output Galvanic Isolation Transformer Embedded
- Dual Input
- Common Battery
- Frontal Access for Input/Output Cabling
- Backfeed Protection
- Cold Start (Optional)
- Advanced Battery Management
- Short Circuit and Overload Protection
- Parallel Ready
- Redundant Power Supply
- Power Walk-in for Progressive Rectifier Start-up when the Mains is Restored
- Battery Temperature Sensor
- Overload and Short Circuit Protection
- Static & Manual Bypass Operation

Advanced Communication Features

- 500 Real Time Event Log with Detailed Parameters
- User Friendly Multilingual 320x240 Graphic Display Provides Operation Information
- Monitoring and Shutdown Software
- RS232 Serial and RS485 Ports
- Modbus RTU (Optional)
- 2 Communication Slots
- Remote Emergency Power Off (Optional)
- Remote Display Panel (Optional)
- Dry Contact (Optional)
- SNMP (Optional)
- Profibus (Optional)

Flexibility

- Optional IP31, IP41, Protection degree for harsh environments.
- Optional tropicalization and anti-corrosion protection for electronic boards.
- Optional temperature sensor for external battery cabinets for extended runtimes.
- External battery cabinets for different sizes of batteries to provide extended runtimes.
- Adaptability to the mains without neutral.

DETAILS

LEVELUPS T3 SERIES 10-15-20 kVA

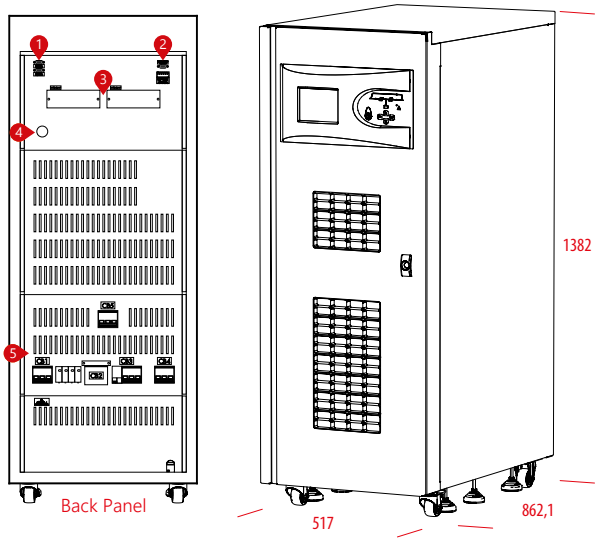

1. Parallel Port Terminal
2. RS232 Terminal
3. Optional Card Slots
4. DC Bus Ramping Up Button
5. Switch

LEVELUPS T3 SERIES 30-40 kVA

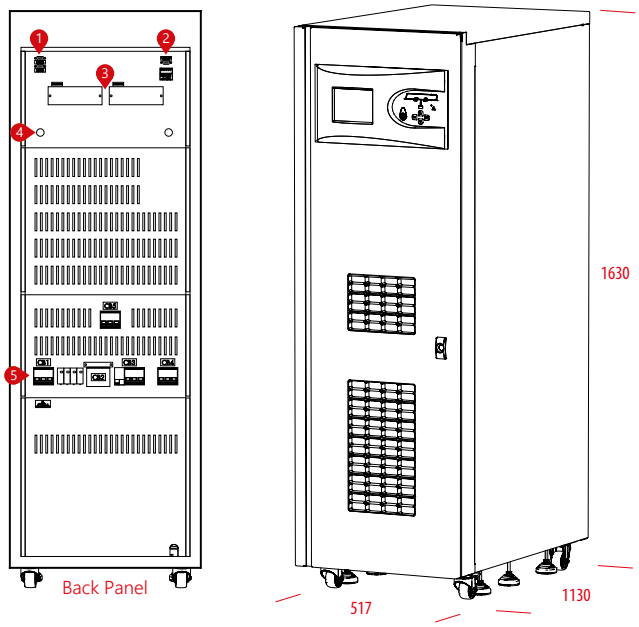

1. Parallel Port Terminal
2. RS232 Terminal
3. Optional Card Slots
4. DC Bus Ramping Up Button
5. Switch

LEVELUPS T3 SERIES 60-80 kVA

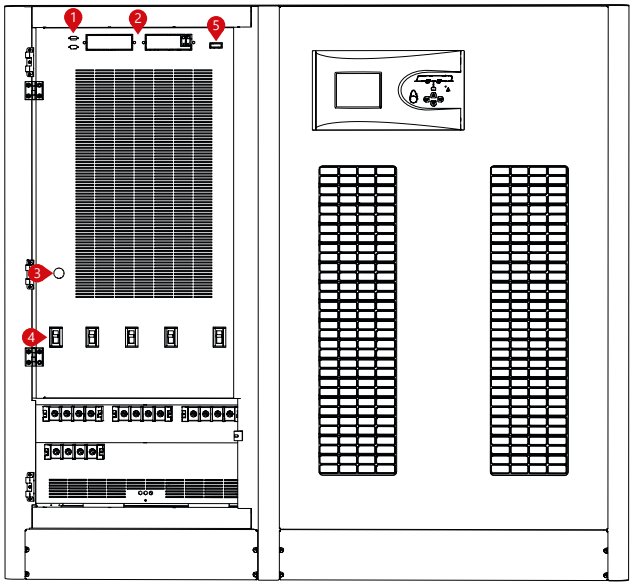

Front Panel

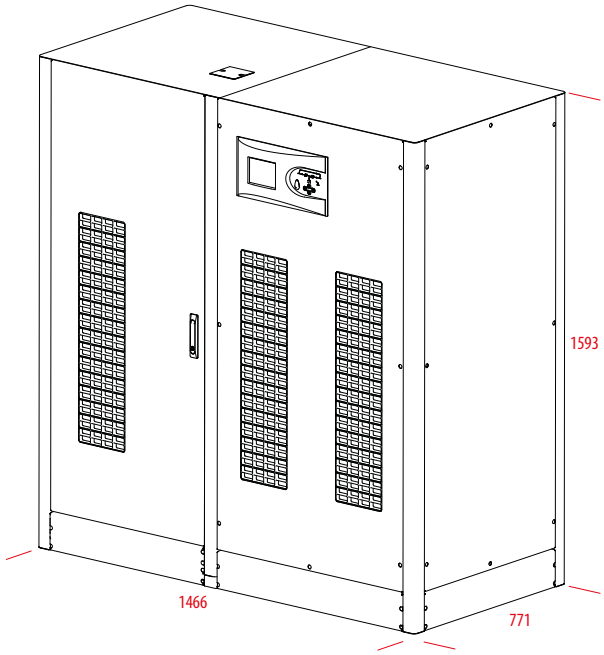

1. RS232 Terminal
2. Optional Card Slots
3. DC Bus Ramping Up Button
4. Switch
5. External Temperature Sensor Output

DETAILS

LEVELUPS T3 SERIES 100-120 kVA

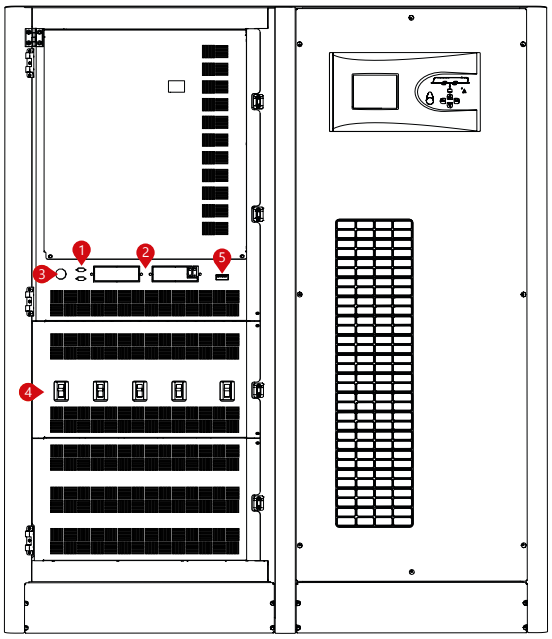

Front Panel

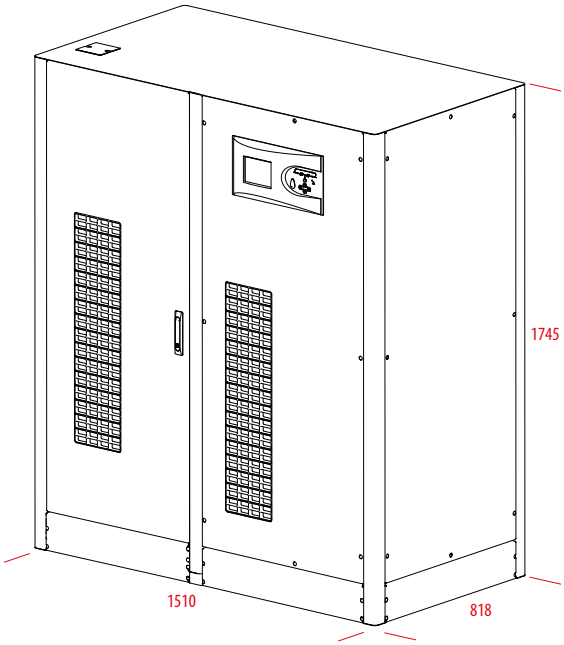

LEVELUPS T3 SERIES 160-200 kVA

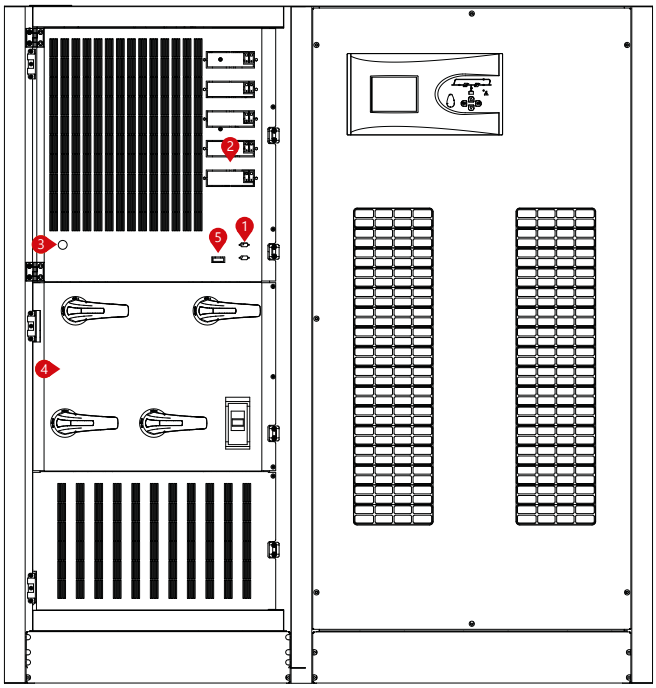

Front Panel

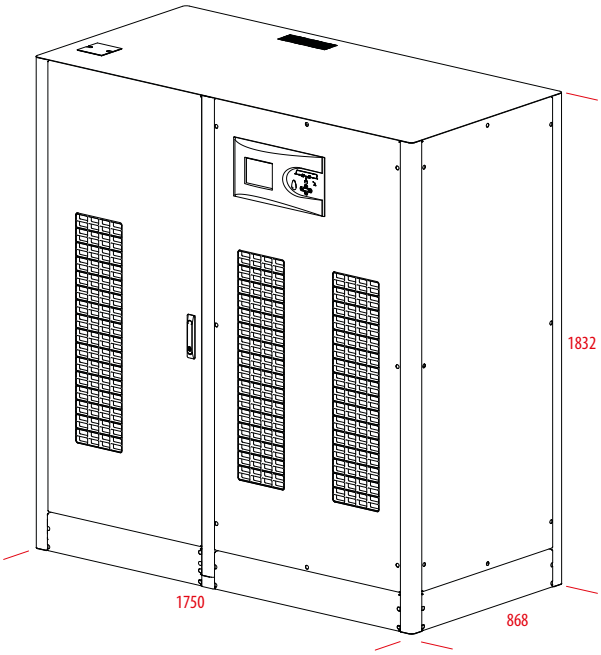

1. RS232 Terminal
2. Optional Card Slots
3. DC Bus Ramping Up Button
4. Switch
5. External Temperature Sensor Output

MODEL												
Capacity		10kVA	15kVA	20kVA	30kVA	40kVA	60kVA	80kVA	100kVA	120kVA	160kVA	200kVA
Power Watt		10kW	15kW	20kW	30kW	40kW	60kW	80kW	100kW	120kW	160kW	200kW
INPUT												
Voltage Range		380/400/415 VAC 3 Phase +N (Optional 220/380 VAC -37% +22% 3P+N+PE)										
Power Factor		At Full Load >0.99										
Frequency Range		45 - 65 Hz (Selectable)										
Total Harmonic Distortion (THDi)		<3%										
OUTPUT												
Voltage Range		380/400/415 VAC 3 Phase + N										
Voltage Tolerance		Static ±1, Dynamic ±3										
Efficiency		94.5%										
Frequency Tolerance		50Hz / 60Hz ±0,01% (Battery Mode)										
THD (THDv)		Linear Load <2%										
		Non-Linear Load <5%										
Crest Factor (CF)		3:1										
Overload Capacity*		At 125% Load 10min, at 150% Load 1min										
BATTERY												
Quantity (12V DC VRLA)		60										
Charge Capacity		12,5% of Active Power (Nominal 0,1 C10, Adjustable)										
STANDARDS												
Quality		ISO 9001, ISO 14001, ISO 18001										
Performance		EN62040-3 (VFI-SS-111)										
EMC/LVD		EN62040-2, EN62040-1, EN60950										
ENVIRONMENT												
Running Temperature		For UPS 0°C~40°C For Battery 0°C~25°C										
Storage Temperature		For UPS 15°C~45°C For Battery -10°C~60°C										
Protection Class		IP20										
Humidity		0-95% Without Condensation										
Altitude		<1000m, Correction Factor 1. <2000m, Correction Factor >0.92, <3000m; Correction Factor >0.84										
Noise Level		<53 dBA		<55 dBA		<60 dBA		<65 dBA			<72 dBA	
COMMUNICATION												
Communication Port		RS232 Standart, RS485 and SNMP Adapter Option										
STANDARDS												
Quality		ISO 9001, ISO 14001, ISO 18001, TSE-HYB										
Performance		EN62040-3 (VFI-SS-111, Bureau Veritas Certified)										
EMC/LVD		EN62040-2, EN62040-1, EN60950, (TÜV SÜD Certified)										
DIMENSIONS & WEIGHT												
Cabinet Dimensions (mm)	Width	517			517		1466		1510		1750	
	Depth	862,1			1130		771		818		868	
	Height	1382			1630		1593		1745		1832	
Net Weight (kg)		342	345	350	343	452	785	860	935	996	1189	1258
Packaging Dimensions (mm)	Width	670			620		1580		1580		1930	
	Depth	900			1180		870		870		970	
	Height	1630			1830		1980		1980		2120	
Gross Weight (kg)		367	370	375	403	512	855	930	1005	1066	1269	1338

* under certain conditions.


POWER
FORLIFE

BOXER
SERIES

10-120 kVA 3:3 PHASE
10-30 kVA 3:1 PHASE
ONLINE UPS

DATA CENTER | MEDICAL | TRANSPORT | INDUSTRY | EMERGENCY

VFI TYPE — UPS ONLINE
TOWER
PF= 0.9 — POWER FACTOR
Service — SERVICE

HIGHLIGHTS

- IGBT PWM Rectifier & Inverter Technology
- Low Input Current THD (<3%)
- High Input Power Factor (>0.99)

DSP Power Factor Corrected IGBT Rectifier

- Equipped with its new IGBT rectifier Boxer series keeps your critical loads protected while its space-saving compact design and front access for maintenance successfully reduce mean time to repair (MTTR).
- Thanks to the wide variety of accessories and options Boxer Series presents maximum flexibility advantage to users and optimizes total cost of ownership.

CERTIFICATES

The *Boxer Series* is certified by TÜV SÜD with regard to product safety (EN 62040-1)

The *Boxer Series* is attested by Bureau Veritas with regard to performance (EN 62040-3)

High Performance & Low Total Cost of Ownership

- IGBT based power factor correction technology provides input power factor close to 1 (≥ 0,99). The high input power leads to reduced electricity pay-out, minimizes cable, switchboard, fuse and generator requirements, thus reducing investment cost.
- Low input current total harmonic distortion (THDi) less than%3 helps to avoid the disturbance and expensive harmonic filters.
- Small footprint and easy maintenance

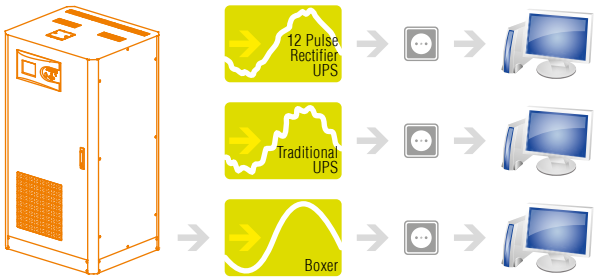

	THD	Power Factor
Boxer with IGBT Rectifier	<3%	<0.99
Traditional UPS with Input Filter	<10%	<0.95
UPS without Input Filter	<25%	<0.85

High Input Power Factor

- 0,99 Input power factor ensures clean and sinusoidal input current.
- The high input power leads to reduced electricity pay-out, minimizes cable, switchboard, fuse and generator requirements, thus reducing investment cost.

Maximum Availability

- Parallel configuration up to 8 units per redundancy (N+1) and power increase.
- Loop connection helps the UPS system to continue the operation when the connection cable is inturrupted.

Standard Electrical Features

- Backfeed Protection
- Cold Start (Optional)
- Advanced Battery Management
- Short Circuit and Overload Protection
- Parallel Ready
- Redundant Power Supply
- Power Walk-in for Progressive Rectifier Start-up when the Mains is Restored.
- Battery Temperature Sensor
- Overload and Short Circuit Protection
- Static & Manual Bypass Operation

Advanced Communication Features

- 500 Real Time Event Log with Detailed Parameters
- User Friendly Multilingual 320x240 Graphic Display Provides Operation Information
- Monitoring and Shutdown Software
- RS232 Serial and RS485 Ports
- Modbus RTU (Optional)
- 2 Communication Slots
- Remote Emergency Power Off (Optional)
- Remote Display Panel (Optional)
- Dry Contact (Optional)
- SNMP (Optional)
- ProfiBUS (Optional)

Flexibility

- Temperature sensor for external battery cabinets for extended runtimes.
- External battery cabinets for different sizes of batteries to provide extended runtimes.
- Different sizes of 10-40kVA cabinets for larger capacity of internal batteries when long autonomy times are required.
- 3/1 Phase version is available for 10-30kVA power ratings
- Frequency converter mode.
- Isolation transformers to vary neutral connectivity in the event of separate power sources or for galvanic isolation between input and output.
- Compatible version with EN 50171 for supplying power to emergency lighting systems.

DETAILS

BOXER SERIES 10-60 kVA

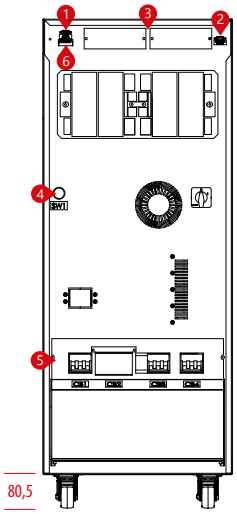

Rear Panel

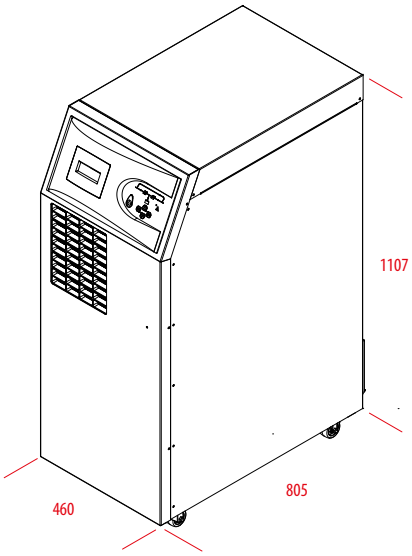

1. Parallel Port Terminal
2. RS232 Terminal
3. Optional Card Slots
4. Manual DC Precharge Button (Automatic Precharge is Option)
5. Manual Bypass/Input/Output/Battery MCBs
6. External Battery Temperature Sensor Terminals

BOXER SERIES 80-120 kVA

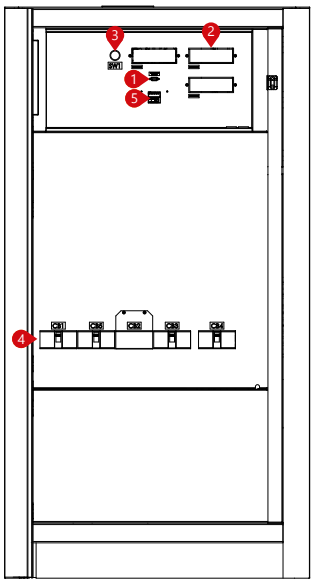

Front Panel

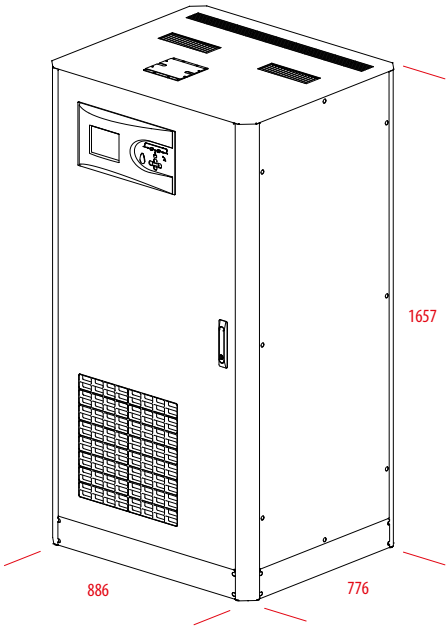

1. RS232 Terminal
2. Optional Card Slots
3. DC Bus Ramping Up Button
4. Manual DC Precharge Button (Automatic Precharge is Option)
5. Manual Bypass/Input/Output/Battery MCBs

MODEL										
Capacity		10kVA	15kVA	20kVA	30kVA	40kVA	60kVA	80kVA	100kVA	120kVA
Power Watt		9kW	13.5kW	18kW	27kW	36kW	54kW	72kW	90kW	108kW
INPUT										
Nominal Voltage		380/400/415 VAC 3P+N (Optional 220/380 VAC -37% +22% 3P+N+PE)								
Voltage Tolerance		-20% +15%								
Frequency Tolerance		50-60 Hz ± 10% (Selectable)								
Power Factor		>0.99								
Total Harmonic Distortion		THDi <%3								
OUTPUT										
Power Factor		0.9								
Nominal Voltage		380/400/415 VAC 3P+N								
Voltage Tolerance		Static ±1, Dynamic ±3								
Frequency Tolerance		50-60 Hz ±0,01% (Battery Mode)								
Output THD		Linear Load <1% / Non Linear Load <3%								
Crest Factor		3:1								
Overload Capacity*		At 125% Load 10min, At 150% Load 1min								
Efficiency (Online Mode)		Up to 93%								
Efficiency (Eco Mode)		Up to 99%								
BYPASS										
Nominal Voltage		380/400/415 VAC 3P+N								
Voltage Tolerance		15% (Configurable from 10% to 30%)								
Frequency Tolerance		±5 (Selectable)								
BATTERY										
Type		VRLA / GEL								
Quantity (12V DC VRLA)		62								
Charge Capacity		25% of Active Power (Nominal 0,1 C10, Adjustable)								
Recharge Time		6-8 hours								
Internal Battery		62 x 7Ah or 9Ah		External Battery Pack						
ENVIRONMENT										
Running Temperature		For UPS 0°C~40°C For Battery 0°C~25°C								
Storage Temperature		For UPS 15°C~45°C For Battery -10°C~60°C								
Protection Class		IP20								
Humidity		0-95% Without Condensation								
Altitude		<1000m Correction Factor 1, <2000m Correction Factor >0.92, <3000m Correction Factor >0.84								
Noise Level		<53 dBA	<55 dBA	<60 dBA	<65 dBA	<72 dBA			<74 dBA	<75 dBA
COMMUNICATION										
Communication Port		RS232 Standart, RS485 and SNMP Adapter Option								
STANDARDS										
Quality		ISO 9001, ISO 14001, ISO 18001, TSE-HYB								
Performance		EN62040-3 (VFI-SS-111, Bureau Veritas Certified)								
EMC/LVD		EN62040-2, EN62040-1, EN60950, (TÜV SÜD Certified)								
DIMENSIONS & WEIGHT										
Cabinet Dimensions (mm)	Width	460						886		
	Depth	805						776		
	Hight	1107						1657		
Net Weight (kg)		122	123	127	146	167	177	322	351	360
Packaging Dimensions (mm)	Width	600						970		
	Depth	900						900		
	Hight	1400						2040		
Gross Weight (kg)		140	141	145	164	185	195	357	376	395

* under certain conditions.
3 Phase in / 1 Phase Out Version is Available. (10 to 30kVA)

PM
SERIES

10-2080 kVA 3:3 PHASE

MODULAR ONLINE UPS

DATA CENTER | MEDICAL | TRANSPORT | INDUSTRY | EMERGENCY

kW=kVA

96% Efficiency

VFI TYPE — UPS ONLINE

MODULAR SYSTEM

PF= 1.0 — POWER FACTOR

Service — SERVICE

HIGHLIGHTS

- High Performance, Modular 3-Phase Power Protection
- Scalable up to 2080kVA, with 96% High Efficiency

Modular UPS Design for High Density Data Centers

- PM Series is a scalable, redundant Modular UPS system designed to cost effectively provide high level availability for high density data centers and critical applications.
- True Online Double Conversion and advanced DSP control technology.
- Modular Architecture can scale power and runtime as demand grows or as higher levels of availability required.
- Combines the modular design with the N+X parallel redundancy technology.
- The maximum capacity of a single cabinet is 520kVA. Cabinets can operate in parallel configuration to build a system of up to 2080kVA.

CERTIFICATES

Higher Level of Efficiency than the EU CoC for AC Ups

Scalable Modular Architecture

Scalable up to the highest active power rating available through two dimensional modularity: Vertical and Horizontal.

- Capacity of single power module is 10-15-20-25-30-40kVA
- The height of single hot swappable power module is 3U
- Standard 1.4m cabinet can hold up to 5 of power modules
- Standard 2m cabinet can hold up to 13 of power modules
- The single UPS cabinet capacity can reach 520KVA and Ups cabinets can operate in parallel configuration to build a system of up to 2080kVA

Modules	Output Power	Dimensions (WxHxD)	Weight
PM 3310-RM	10kVA 3/3 Module	443x131x580mm 3U	26kg
PM 3315-RM	15kVA 3/3 Module	443x131x580mm 3U	30kg
PM 3320-RM	20kVA 3/3 Module	443x131x580mm 3U	31kg
PM 3325-RM	25kVA 3/3 Module	443x131x580mm 3U	31kg
PM 3330-RM	30kVA 3/3 Module	443x131x580mm 3U	32kg
PM 3340-RM	40kVA 3/3 Module	443x131x580mm 3U	33kg

"Size What You Need Now and Pay as You Grow"

Standart Electrical Features

- Output Power Factor: 0.9 (Optional 1.0)
- Hot Swappable Maintenance (UPS & Battery)
- Separated Bypass
- Maintenance Bypass
- Parallelable up to 4 Cabinets
- Common Battery
- Control of On/Off State of each Module
- Freely Set the Charge Current
- Intelligent Charging
- Mid or Small Power Distributing System
- Selectable Battery Voltage 3 Input 3 Output ±216VDC/ ±228VDC/±240VDC (32/34/36/38/40pcs)

Advanced Communication Features

- RS232 (USB)
- RS485 Communication Interface
- SNMP Card (Optional)
- Relay Card (Optional)
- Centralized Monitor Module that is Hot Swappable
- Single Module LCD Display
- Control Monitoring with 5" Color LCD Graphic Display

UPS Cabinet Control Panel

Module Control Panel

Hot Swappable Battery Modules

Plug and play battery modules ensures uninterrupted power to protected equipment while batteries are being replaced. Allows quick and easy battery replacement.

- Each Battery Module Consists of 18 pcs 7Ah/9Ah
- Only 3U Height
- Simply Plug into UPS System

3 U Battery Box Optional

19"Matching Battery Cabinets (Optional)

N+X parallel redundancy

PM series UPS adopts N+X parallel redundancy design, users can set different redundancy according to the importance of the load. While the number of redundancy modules are more than two, the availability of UPS system will achieve 99.999% and the MTBF will be more than 15,000,000 hours which can satisfying the reliability requirement of critical load. The UPS redundancy degree can be set through the LCD, when the load exceeds the set value, the UPS will alarm in time.

Independent control system

Every power module is equipped independent control system, and control itself independently according to the sharing message, and the fault module separates from the system automatically.

High Efficiency and Low Total Cost of Ownership

PM Designed for highly economical energy consumption and is a perfect fit in your data center and server room. Offering efficiency of up to 96%, THDi of 2% and unity Input Power Factor without harmonic filters PM delivers:

- Significant energy savings
- Lower cooling costs
- Smaller generator sizing

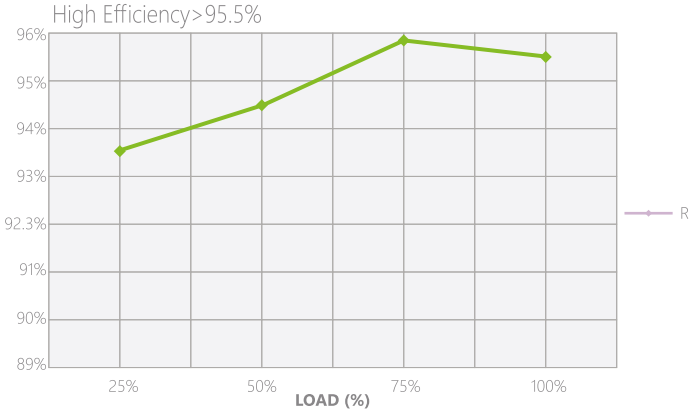

- High input power factor (>0.99) and low input Total Harmonic Distortion (THDi<2%) minimizes installation costs by enabling the use of smaller generators and cabling.
- Fully-rated power kVA equals kW feature option reduces cost by eliminating the need for an oversized UPS for Power Factor Corrected (PFC) loads.

10kVA/15kVA/20kVA/25kVA/ 30kVA 3:3 phase

40kVA 3:3 phase

MODEL		PM3310-100kVA	PM3320-100kVA	PM3320-200kVA	PM3325-250kVA	PM3330-150kVA	PM3330-300kVA	PM3340-200kVA	PM3340-320kVA	PM3340-520kVA	PM3340-800kVA	PM3340-1040kVA	PM3340-1560kVA
CAPACITY													
UPS Cabinet		10~100 kVA	20~100 kVA	20~200 kVA	25~250 kVA	30~150 kVA	30~300 kVA	40~200 kVA	40~320 kVA	40~520 kVA	800 kVA	1040 kVA	1560 kVA
Paralleling		Up to 6 Frame	Up to 6 Frame	Up to 6 Frame	Up to 6 Frame	Up to 6 Frame	Up to 6 Frame	Up to 6 Frame	Up to 6 Frame	Up to 4 Frame	Up to 2 Frame	Up to 2 Frame	Up to 1 Frame
PM Module		10kVA/10kW, 15kVA/15kW, 20kVA/20kW, 25kVA/25kW, 30kVA/30kW, 40kVA/40kW											
INPUT													
Phase		3 Phase 4 Wires and Ground											
Rated Voltage		380/400/415 VAC											
Voltage Range		208~478 VAC or 120 VAC~276 VAC											
Frequency Range (Hz)		40~70 Hz											
Power Factor		>0.99											
Bypass Voltage Range		Max. Voltage: +15% (Optional +5%, +10%, +25%) Min. Voltage: -45% (Optional -20%, -30%)											
		Frequency Protection Range: ±10%											
Current Harmonic		<2% (100% Non-Linear Load)											
Generator Input		Support											
OUTPUT													
Phase		3 Phase 4 Wires and Ground											
Rated Voltage		220/240 VAC 380/400/415 VAC											
Power Factor		1											
Voltage Precision		±1%											
Output Frequceny		±1%, ±2%, ±4%, ±5%, ±10% of the Rated Frequency (Optional) (50/60±0.2) Hz											
Crest Factor		3:1											
THD		≤1% With Linear Load ≤4% With Non-Linear Load											
Efficiency		96%											
COMMUNICATION													
UPS Cabinet		RS232, RS485, Intelligent Slot x 2 (SNMP Card, Relay Card, Dry Contact Optional)											
INTERFACE													
PM Series UPS Module		RS232											
BATTERY													
Voltage		±192V / ±204V / ±216V / ±228V / ±240V DC; Battery Quantity (Optional)											
Charge Current (A)	UPS Cabinet	60A Max	30A Max	60A Max	60A Max	50A Max	100A Max	50A Max	80A Max	130A Max	200A Max	260A Max	390A Max
	Module	6A/10A/(20A Optional) Max (Charge Current can be Set According to Battery Capacity Installed)											
Crest Factor	Backup Time	Depends on the Capacity of External Batteries											
THD	Transfer Time	Utilty to Battery : 0ms; Utily to Bypass: 0ms											
PROTECTION													
Overload	Normal Mode	Load ≤110%: Last 60min, ≤125%: Last 10min, ≤150%: Last 1min, ≥150% Shut Down UPS Immediately											
	Battery Mode	Load ≤110%: Last 10min, ≤125%: Last 1min, ≤150%: Last 1s ≥150% Shut Down UPS Immediately											
OPERATING													
Temperature		0°C ~ 40°C											
ENVIRONMENT													
Humidity		0 ~ 95% Non-Condensing											
Storage Temperature		-25°C ~ 55°C											
Noise	Number of Modules ≤5	<55 dBA (1m)											
	Number of Modules >5	<65 dBA (1m)											
Altitude		<1500m											
DIMENSIONS & WEIGHT													
Unit Dimensions (WxDxH) (mm)	UPS Cabinet	600x840 x1400	600x840 x1400	600x1100 x2000	600x1100 x2000	600x840 x1400	600x1100 x2000	860x600 x2000	860x600 x2000	860x1200 x2000	860x1800 x2000	860x3000 x2000	1100x4800 x2000
	Module	443 x 580 x 131 (3U)											
Weight (kg)	UPS Cabinet	170	170	270	275	152	280	205	310	514	1600	1810	2800
	Module	10kVA: 26kg; 15kVA: 30kg; 20kVA: 31kg; 25kVA: 31kg; 30kVA: 32kg; 40kVA: 33kg											
INDUSTRY STANDARD		CE, IEC 62040-2, IEC 62040-1, IEC 62040-3, IEC61000-4, IEC60950-1											

ROTABLOC® RBT
SERIES

400-2000 kVA
DYNAMIC UPS

DATA CENTER | MEDICAL | TRANSPORT | INDUSTRY | EMERGENCY

97% Efficiency

UPS ROTARY TYPE | PF= 0.8 POWER FACTOR | Service SERVICE

HIGHLIGHTS

- Total Power Failure Protection
- Outstanding Voltage Conditioning
- Unrivaled Lowest Total Cost of Ownership
- Electrical Coupling with Existing or New Genset

Robust Rotary Technology

- The RBT system consists of a standard synchronous generator with no special windings and a simple steel flywheel. The low speed shaft extends bearing life and reduces maintenance.
- The ROTABLOC® machine is very robust as critical functions do not use fragile components such as power electronics, power capacitors, electro-chemical batteries, active magnetic bearings, electro-mechanical or mechanical friction clutches.

CERTIFICATES

CE UL

Standard Features

- Input / Output Power Measurement
- Fully Automatic Operation
- Voltage-free Interface Signals
- Automatic By-pass

Options

- Automatic Lubrication System
- Plug & Run Parallel Working
- Supervision Software
- Containerized Solution
- Bearing Monitoring
- Customized Switchgear (Form 4, NEMA)
- Soundproof Enclosure
- Tropical Conditions

Green Technology

Our highly ecient UPS supports your aims to minimize your environmental impact and mitigate the eects of rising energy costs in the future. Our ROTABLOC® design, almost all steel and copper, ensures that it is over 99.97% recyclable.

- No batteries – no need for expensive replacement cycle / no costly disposal of hazardous materials.
- No air conditioning required – providing a/c for battery rooms is a significant cost and impacts the environment.
- Dynamic Autonomy Control (DAC): Automatic speed adaptation for optimum eciency at partial load with FULL critical load protection.
- 91% of all voltage interruptions last less than 1 second (European urban locations) the RBT protects the load without generator starts*.

*This is configurable to maximize RBT power output or compensate for short interruptions.

ROTABLOC® RBT Range			
TYPE		POWER	
50 Hz or 60 Hz		kVA	kW
RBT-400	50/60	400	320
RBT-500	50/60	500	400
RBT-500 HP (PF:1)	50/60	500	500
RBT-630	50/60	630	504
RBT-800	50/60	800	640
RBT-1000	50/60	1000	800
RBT-1250 TW	50/60	1250	1000
RBT-1600 TW	50/60	1600	1280
RBT-1750 TW	50/60	1750	1400
RBT-2000 TW	50/60	2000	1600

Normal Operation

- In normal operation the RBT protects the electrical load from power quality problems eliminating harmonics, flicker, voltage spikes and sags. This power quality protection prevents wear on your facilities infrastructure – including damage to motors and pumps, and reduces the maintenance downtime necessary to repair or replace such assets. These issues can be over 95% of power problems faced by your facility each year.

Mains Failure

- During mains failure the RBT protects the load and maintains the power supply at the precise voltage and frequency by supplying energy to the alternator from the Accumulator without need for electronic power conversion.
- Whilst these 'blackout' events are fewer in number, for organizations where power is always required during operation, interruption of mains electricity leading to loss of production (including restart time), wastage of part processed materials and a dented reputation could be very costly.

Extended Mains Failure

- Under extended mains failure, the load is automatically transferred to your chosen back-up energy source, usually a diesel genset. Once a stable mains supply returns the RBT will safely transfer the load back and be ready to act again.

Twin Rotabloc 1600kW

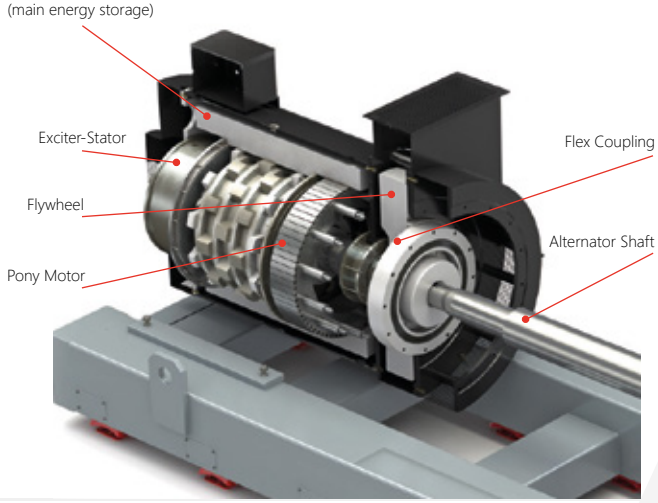

Simply Reliable Solutions to Power Quality Issues

Data Centres, Banking, Telecommunications, Airports, Healthcare, Industrial, Manufacturing, Government, Defense, Water, Treatment, Alternative Energy, Stadiums, Research, in fact all installations where continuous running is required, demand a filtered, continuous and sustainable power supply solution.

Features	Benefits
Outstanding voltage conditioning	• Protects equipment against mains voltage fluctuations, sags and microcuts • Naturally compensates power factor without need for PFC equipment • Filters load harmonics and voltage harmonics from mains • Eliminates flicker
Total power failure protection	• Sustainable continuous power supply • Ride-through mode covers 90% of mains failures without genset start • Flexible DRUPS solution when configured with standard genset
Robust rotary technology	• Conventional electrical / mechanical machine • High reliability • Low cost maintenance
High efficiency	• Energy saving • Unrivaled low Total Cost of Ownership (TCO) • Green technology
High short-circuit power	• Fast fault-clearing capacity ensuring protections selectivity • Suitable for high peak currents (motors and mechanical loads) • Suitable for high crest factors (non-linear loads)
Modular and resilient "Plug & Run" paralleling	• Flexibility from day one • Scalability for future extension • High resilience thanks to full redundancy without single point of failure • Ideal for Tier III / Tier IV applications (Uptime Institute)
Easy interfacing	• User-friendly digital display (HMI) • Basic interface via simple contacts • Powerful communication features : - SCADA / BMS interface via MODBUS RTU/TCP - Internet access - PC supervision - Remote monitoring, alarming and paging features
Low maintenance	• Simple maintenance operations • Unaffected up-time: no need to stop UPS during maintenance • Automatic Lubrication System for maximum reliability and lowest TCO

Medium Voltage

- Recognition of the advantages of Medium Voltage (MV) systems in facilities with high power requirements is growing. The benefits include: ease of power distribution, lower TCO, improved safety, reduced maintenance / greater reliability, enhanced flexibility in current and future power infrastructure and improved green credentials with lower embodied energy and lower energy usage.
- Makelsan can provide DRUPS systems that will support MV in your facility, delivering high quality, continuous MV power to your operation. We are experts in Medium Voltage and can utilize Vesta-AR arc-resistant metal-clad switchgear, is the leading MV solution for distributing power safely and eciently throughout your building.

DETAILS

ROTABLOC® RBT SERIES 400 kVA

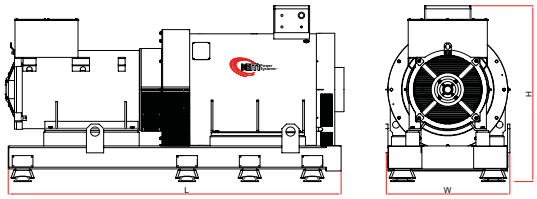

L x W x H 2895 x 1080 x 1529 mm
Net weight 7850 kg
Protection IP23

Control Cabinet

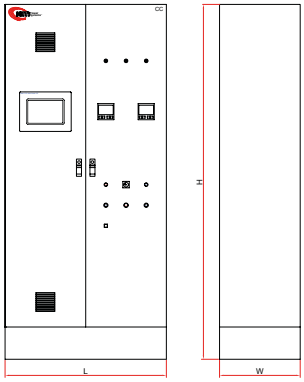

L x W x H 1000 x 500 x 2200 mm
Net weight 305 kg
Protection IP43

Power Cabinet

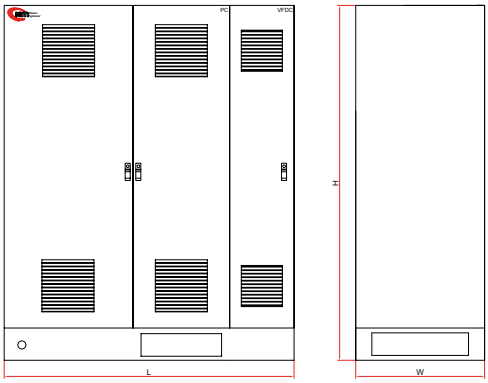

L x W x H 1800 x 800 x 2200 mm
Net weight 1575 kg
Protection IP43

ROTABLOC® RBT SERIES 2000 kVA

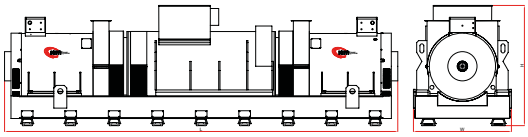

L x W x H 6058 x 1510 x 1852 mm
Net weight 22340 kg
Protection IP23

Control Cabinet

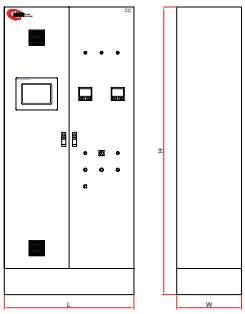

L x W x H 1000 x 500 x 2200 mm
Net weight 305 kg
Protection IP43

Power Cabinet

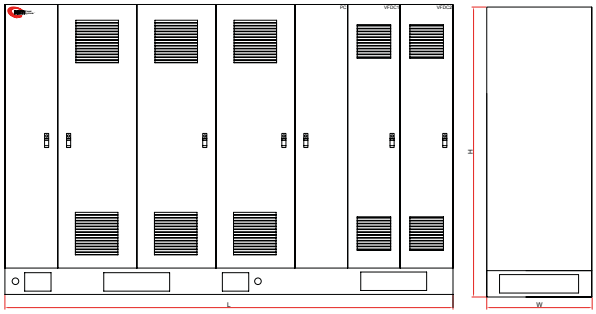

L x W x H 4200 x 800 x 2200 mm
Net weight 4590 kg
Protection IP43

Performances and Characterisitics

MODEL	RBT-400	RBT-500	RBT-500HP	RBT-630	RBT-800	RBT-1000	RBT-1250TW	RBT-1600TW	RBT-1750TW	RBT-2000TW
Voltage	3 x 400 / 480 V									
Frequency	50 / 60 Hz									
Nominal Phase Current	577 A	722 A	722 A	909 A	1155 A	1443 A	1804 A	2309 A	2526 A	2887 A
Protection by Upstream Breaker	630 A	800 A	1000 A	1000 A	1250 A	1600 A	2000 A	2500 A	3200 A	3200 A
Nominal Apparent Power	400 kVA	500 kVA	500 kVA	630 kVA	800 kVA	1000 kVA	1250 kVA	1600 kVA	1750 kVA	2000 kVA
Nominal Active Power	320 kW	400 kW	500 kW	504 kW	640 kW	800 kW	1000 kW	1280 kW	1400 kW	1600 kW
Nominal cos	0.9 Leading to 0.8 Lagging									
Efficiency at Nominal Load	95.3%	95.8%	96.5%	95.5%	96.4%	96.8%	95.5%	96%	95.5%	96%
Autonomy (Adjustable)	12s				11.3s	10s	12s	11.3s	11.4s	10s
Maximum Energy Storage	7.2 MJ					8.0 MJ	14.4 MJ	14.4 MJ	16 MJ	
Ambient Temperature	0-40°C / 32-104°C									
Max Power Dissipation for Ventilation Design	25 kW	30 kW	30 kW	35 kW	40 kW	50 kW	70 kW	80 kW	90 kW	100 kW
Altitude (Without de-rating)	≤1000 m / 3280 ft									
Humidity	≤90%									

LION PLUS
SERIES

650-2000 VA
LINE INTERACTIVE UPS

HOME/OFFICE

VI TYPE — UPS LINE INTERACTIVE
TOWER
PLUG & PLAY
USB
LCD DISPLAY (1000-1500-2000VA)

FEATURES

- LED Display (650-850)
- LCD Display (1000-1500-2000)
- Microprocessor-Based Digital Control
- Automatic Voltage Stabilization
- Automatic Breaker
- Frequency Adaptive
- User Friendly Alarm System
- Cold Start
- Auto Restart while AC is Recovering
- Simulated Sine Wave Output
- Intelligent Battery Management
- Short Circuit and Over Discharged Protection
- Automatically Charging Battery at UPS Off Mode
- Shut Down when No Load Connected at Battery Mode
- USB Communication Port
- RJ11/RJ45 Protection

DETAILS

1. AC Input
2. Outlet
3. Breaker
4. RJ11/RJ45
5. USB
6. Fan

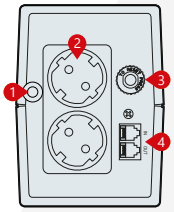

Rear Panel
650-850 VA

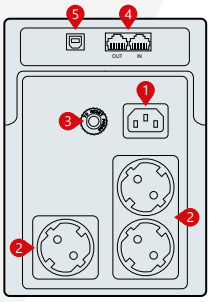

Rear Panel
1000-1500 VA

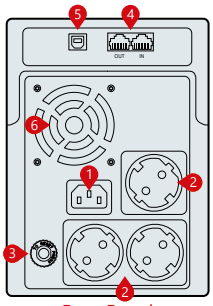

Rear Panel
2000 VA

CERTIFICATES

CE PCT TSE

LION PLUS SERIES
650-2000 VA
LINE INTERACTIVE UPS

MODEL						
Capacity		650VA / 390W	850VA / 510W	1000VA / 600W	1500VA / 900W	2000VA / 1200W
INPUT						
Related Voltage		220V / 230V / 240 VAC				
Voltage Range		162-290 VAC ±7%				
Frequency		50-60 Hz ±10%				
OUTPUT						
Voltage Range		220V / 230V / 240 VAC				
Voltage Precision		±10% (Battery Mode)				
Frequency	AC Mode	Same as Mains				
	Battery Mode	50-60 Hz ±1%				
Waveform		Modified Sine Wave				
Crest Factor		3:1				
Transfer Time		2~6ms, 10ms Max.		4~8ms, 10ms Max.		
Overload	AC Mode	110% + 20% / -10%; Shutdown after 5 minutes and go to Fault Mode for all Model				
		120% + 20% / -10%; Shutdown immediately and go to Fault Mode for 1B Model				
		120% + 20% / -10%; Shutdown after 8 sec and go to Fault Mode for 2B Model				
	Battery Mode	110% + 20% / -10%; Shutdown after 5 seconds 120% + 20% / -10%; Shutdown immediately				
EFFICIENCY						
Inverter Mode		Line Mode: >95%, AVR Mode: >88%				
Battery Mode		>60%				
BATTERY						
Battery Configuration		12V/7Ah*1	12V/9Ah*1	12V/7Ah*2	12V/9Ah*2	12V/9Ah*2
Charge Current		About 1A at Normal Mode				
Recharge/Charging Time		6 hours to 90% at Normal Mode after Complete Discharge (Load>50%)				
Backup Time		~16 min.	~20 min.	~30 min.	~50 min.	~50 min.
PROTECTION						
Full Protection		Discharge, Overcharge, Overload Protection		Discharge, Overcharge, Overload, Short Circut Protection		
INDICATION						
AC Mode		Green LED Lighting		Green LED Lighting		
Battery Mode		Green LED Lighting		Yellow LED Lighting		
Fault		N/A		Red LED Lighting		
ALARM						
Battery Mode		Sounding every 10 seconds				
Battery Low		Sounding every 1 seconds				
Overload		Sounding every 0.5 seconds				
Fault		Continuously Sounding				
OPERATING ENVIRONMENT						
Temperature		0 ~ 40ºC				
Storage Temperature		-20ºC ~ 55ºC				
Relative Humidity		0 to 90 ºC				
Audible Noise (at 1m)		≤40 dB			≤45 dB	
OTHER						
Communication Port		USB				
Software		Windows Family / Linux / Mac				
DIMENSIONS & WEIGHT						
Dimension (mm) WxDxH		278 x 100 x 143		365 x 139 x 195		
Packaging Dimension (mm) WxDxH		332 x 142 x 225		457 x 235 x 297		
Net Weight (kg)		4,35	5,15	9,07	10,74	10,74
Gross Weight (kg)		4,55	5,35	10,2	12	12

POWERPACK SE SERIES

1-2-3 kVA

1:1 PHASE

ONLINE UPS

HOME/OFFICE | EMERGENCY | MEDICAL | INDUSTRY

VFI TYPE — UPS ONLINE | TOWER | PF= 0.9 — POWER FACTOR | PLUG & LAY — PLUG & PLAY

FEATURES

- High Frequency and True Double-Conversion
- DSP (Digital Signal Processors) Technology
- Input Power Factor Correction (PFC)
- Wide Input Voltage Range (110~300V)
- Output Power Factor 0.9
- Cold Start
- Auto Sensing Frequency
- ECO Mode Operation for Energy Saving
- Selectable Output Voltage via LCD
- Output Bypass Settable via LCD
- Power-On Self Test
- Advanced Battery Management (ABM)
- Short Circuit and Overload Protection
- Automatic Charging in Off Mode
- Auto Control Fan Speed when Loads Varies
- Standard RS232 Communication Port and RJ45 Protection
- USB/SNMP Communication Port *(Optional)*
- Emergency Power Off (EPO) *(Optional)*
- Extension Battery Bank *(Optional)*
- Built-In Isolation Transformer *(Optional)*

DETAILS

1. AC Input
2. DC Input
3. Outlet
4. Breaker
5. Fan
6. Modem/Tel/Fax
7. RS232
8. USB *(Optional)*
9. EPO *(Optional)*
10. SNMP/AS400 *(Optional)*

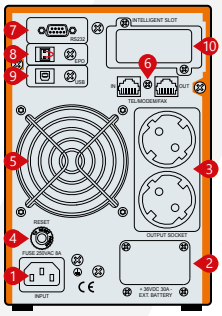

Rear Panel 1kVA

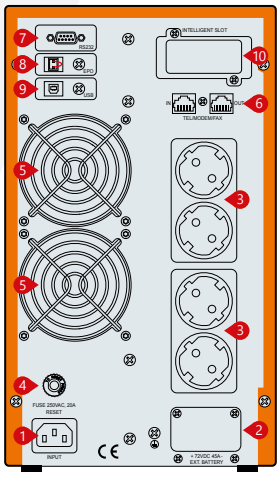

Rear Panel 2-3kVA

CERTIFICATES

CE PCT TSE

MODEL									
Capacity	1kVA / 900W			2kVA / 1800W			3kVA / 2700W		
INPUT									
Related Voltage	208V / 220V / 230V / 240 VAC								
Voltage Range	110 ~ 176 VAC (Linear Derating Between 50% and 100% load); 176 ~ 280 VAC (No Derating); 280 ~ 300 VAC (Derating 50%)								
Frequency	40 ~ 70 Hz (Auto Sensing)								
Power Factor	≥ 0.99								
Bypass Voltage Range	-25% ~ +15% (Settable)								
OUTPUT									
Voltage Range	208V / 220V / 230V / 240 VAC (Settable via LCD)								
Voltage Regulation	±1%								
Frequency	45 ~ 55 Hz or 55 ~ 65 Hz (Synchronized Range); 50 / 60 Hz ±0.1 Hz (Battery Mode)								
Waveform	Sinusoidal								
Crest Factor	3:1								
Harmonic Distortion	≤2% (Linear Load); ≤5% (Non-Linear Load)								
Nominal Voltage	Mains Mode to Battery Mode: 0ms Inverter Mode to Bypass Mode: 4ms (Typical)								
Overload Capability	105% ~ 125%: Transfer to Bypass in 1min 125% ~ 150%: Transfer to Bypass in 30s >150%: Transfer to Bypass in 300ms								
EFFICIENCY									
Mains Mode	≥90%			≥91%			≥92%		
ECO Mode	≥95%			≥96%			≥97%		
BATTERIES									
DC Voltage	24 V	36 V	36 V	48 V	72 V	72 V	72 V	96 V	96 V
Inbuilt Battery	2 x 7Ah	3 x 7Ah	External	4 x 7Ah	6 x 7Ah	External	6 x 7Ah	8 x 7Ah	External
Charging Current (Max.)	1A		6A	1A		6A	1A		6A
Recharge Time	8 hour								
ALARMS									
Utility Failure	Beep / 4sec								
Low Battery	Beep / 1sec								
Overload	Beep Twice / 1sec								
UPS Fault	Long Beep								
COMMUNICATIONS									
RS232 (Standard) / USB (Optional)	Supports Windows® 98/2000/2003/XP/Vista/2008/Windows® 7/8/10								
SNMP (Optional)	Power Management from SNMP Manager and Web Browser								
OTHERS									
Operating Temperature	0 ~ 40°C								
Relative Humidity	0 ~ 90% (Non-Condensing)								
Noise Level	≤45 dB (1m)								
DIMENSIONS & WEIGHT									
Dimension WxDxH (mm)	144 x 336 x 214	144 x 414 x 214	144 x 336 x 214	191 x 418 x 335				191 x 464 x 335	191 x 418 x 335
Packaging Dimension WxDxH (mm)	232 x 417 x 318	231 x 492 x 316	232 x 417 x 318	318 x 533 x 471				320 x 573 x 471	318 x 533 x 471
Net Weight (kg)	9.5	13	6	18	25.7	10.5	27.2	32	11
Gross Weight (kg)	10.5	14.2	7	19.5	27.4	12	29	34	12.5

POWERPACK SE SERIES

6-10 kVA 1:1 PHASE

ONLINE UPS

HOME/OFFICE | EMERGENCY | MEDICAL | INDUSTRY | DATA CENTER | TRANSPORT

VFI TYPE — UPS ONLINE | TOWER | PF=0.9 — POWER FACTOR | Service — SERVICE

FEATURES

- High Frequency and True Double-Conversion
- DSP (Digital Signal Processors) Technology
- Input Power Factor Correction (PFC)
- Wide Input Voltage Range (110~300V)
- Output Power Factor 0.9
- Cold Start
- Auto Sensing Frequency
- ECO Mode Operation for Energy Saving
- Selectable Output Voltage via LCD
- 50Hz/60Hz Frequency Converter Mode Available
- Selectable Battery Low Voltage via LCD
- Power-On Self Test
- Advanced Battery Management (ABM)
- Short Circuit and Overload Protection
- Automatically Charging Battery at UPS Off Mode
- Fan Speed Auto Control when Load Varies
- Standard RS232 Communication Port
- USB/SNMP Communication Port *(Optional)*
- Emergency Power Off (EPO) *(Optional)*
- Extension Battery Bank *(Optional)*
- Manual Bypass
- N+X Redundancy Parallel *(Optional)*

DETAILS

1. AC Input
2. DC Input
3. Outlet
4. Breaker
5. Fan
6. EPO
7. RS232
8. USB *(Optional)*
9. Parallel Card *(Optional)*
10. SNMP/AS400 *(Optional*
11. Manual Bypass
12. BAT_NTC *(Optional)*

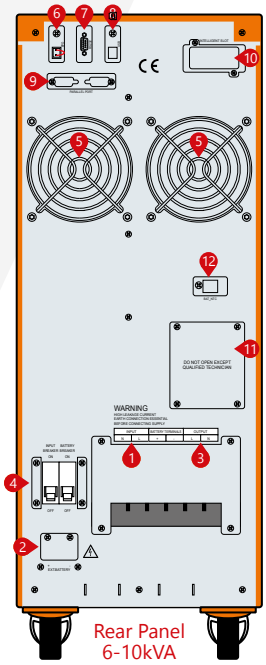

Rear Panel
6-10kVA

CERTIFICATES

CE PCT TSE

MODEL			
Power Watt		**6**kVA / **5400**W	**10**kVA / **9000**W
INPUT			
Related Voltage		208V / 220V / 230V / 240 VAC	
Voltage Range		Half Load (110-300) ±5 VAC, Full Load (160-300) ±5 VAC	
Frequency		40 ~ 70 Hz (Auto Sensing)	
Power Factor		≥0.99	
Bypass Voltage Range		160V - Rated Output Voltage +32V	
OUTPUT			
Voltage Range		208V / 220V / 230V / 240 VAC (Setting Available via LCD)	
Voltage Regulation		±1%	
Frequency		45 ~ 55 Hz or 55 ~ 65 Hz (Synchronized Range); 50 / 60 Hz ±0.1 Hz (Battery Mode)	
Waveform		Pure Sine Wave	
Crest Factor		3:1	
Harmonic Distortion		≤2% (Linear Load); ≤5% (Non-Linear Load)	
Transfer Time		AC Mode to Battery Mode: 0ms Inverter Mode to Bypass Mode: 0ms	
Overload Capability		105% ~ 125%: Transfer to Bypass after 3min 125% ~ 150%: Transfer to Bypass after 30sec >150%: Transfer to Bypass after 100ms	
EFFICIENCY			
AC Mode		≥92%	
ECO Mode		≥98%	
BATTERIES			
DC Voltage		192V-240V	
Inbuilt Battery		16-20 x 7-9Ah	
Charge Current	Standard Model	1A	
	Long Time Model	1A / 3.5A / 7A	
Typical Recharge Time		8 hours Recover to 90% Capacity	
ALARMS			
Utility Failure		Beep / 4sec	
Low Battery		Beep / 1sec	
Overload		Beep Twice / 1sec	
UPS Fault		Long Beep	
ENVIRONMENT			
Humidity		20-90% RH @ 0-40ºC (Non-Condensing)	
Noise Level		≤50 dB (1m)	
MANAGEMENT			
RS232 (Standard)/USB(Optional)		Supports Windows® 98/2000/2003/XP/Vista/2008/Windows® 7/8/10	
SNMP (optional)		Power Management from SNMP Manager and Web Browser	
DIMENSIONS & WEIGHT			
Dimension WxDxH (mm)		262 x 650 x 735	
Packaging Dimension WxDxH (mm)		440 x 720 x 940	
Net Weight (kg)		64.1	70.8
Gross Weight (kg)		72.2	78.9

POWERPACK SE SERIES

10-15-20 kVA

3:1 PHASE

ONLINE UPS

HOME/OFFICE | EMERGENCY | MEDICAL | INDUSTRY | DATA CENTER | TRANSPORT

VFI TYPE — UPS ONLINE | TOWER | PF= 0.9 — POWER FACTOR | Service — SERVICE

FEATURES

- High Frequency and True Double-Conversion
- DSP (Digital Signal Processors) Technology
- Input Power Factor Correction (PFC)
- Wide Input Voltage Range (110~300V)
- Output Power Factor 0.9
- Optimized Battery Configuration: 192V / 240V
- Cold Start
- Auto Sensing Frequency
- ECO Mode Operation for Energy Saving
- 50Hz/60Hhz Frequency Conversion Mode
- Selectable Output Voltage via LCD
- Selectable Battery Shutdown Voltage (Eod) via LCD
- Selectable Input Mode via LCD (3:1 or 1:1)
- Power-On Self Test
- Advanced Battery Management (ABM)
- Short Circuit and Overload Protection
- Automatically Charging in Off Mode
- Fan Speed Auto Control when Load Temperature Varies
- Standard RS232/USB Communication Port
- Standard Emergency Power Off (EPO)
- RS485/SNMP/AS400 Communication Port *(Optional)*
- Extension Battery Bank *(Optional)*
- Manual Bypass
- N+X Redundancy Parallel *(Optional)*

CERTIFICATES

CE PCT TSE

DETAILS

1. AC Input
2. DC Input
3. Outlet
4. Breaker
5. Fan
6. EPO
7. RS232
8. USB
9. Parallel Card *(Optional)*
10. SNMP/AS400 *(Optional*
11. Manual Bypass
12. BAT_NTC *(Optional)*

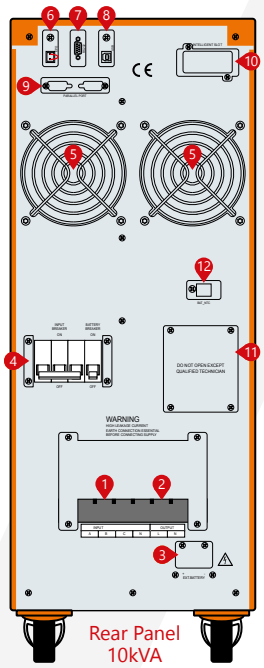

Rear Panel 10kVA

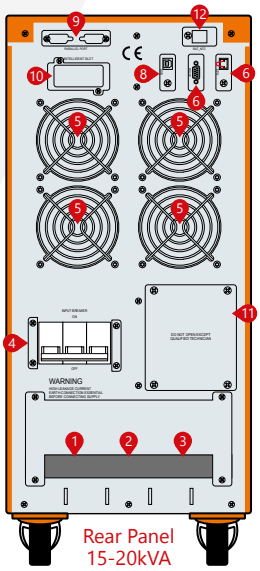

Rear Panel 15-20kVA

MODEL				
Power Watt		**10**kVA / **9**kW	**15**kVA / **13.5**kW	**20**kVA / **18**kW
INPUT				
Related Voltage		3 : 1 : 360V / 380V / 400V / 415 VAC 1 : 1 : 208V / 220V / 230V / 240 VAC (Settable via LCD)		
Voltage Range		3 : 1 : Half Load (190 ~ 520) ±5 VAC, Full Load (277 ~ 520) ±5 VAC		
Frequency		40 ~ 70 Hz (Auto Sensing)		
Power Factor		3 : 1 ≥ 0.95; 1 : 1 ≥ 0.99		
BYPASS				
Voltage Range		160V Rated Output Voltage +32V		
Frequency		50 / 60 Hz ±5 Hz		
OUTPUT				
Voltage Range		208V / 220V / 230V / 240 VAC (Settable via LCD)		
Voltage Regulation		±1%		
Frequency		Synchronized with Utility in Mains Mode; 50 / 60 ±0.2 Hz in Battery Mode		
Waveform		Sinusoidal		
Crest Factor		3:1		
Harmonic Distortion		≤2% (Linear Load); ≤5% (Non-Linear Load)		
Transfer Time		0 ms		
Overload Capability		105% ~ 125%: Transfer to Bypass in 3min 125% ~ 150%: Transfer to Bypass in 30sec >150%: Transfer to Bypass in 1sec		
EFFICIENCY				
Mains Mode		≥92%		
Battery Mode		≥91%		
ECO Mode		≥98%		
BATTERIES				
DC Voltage		192 VDC / 240 VDC		
Inbuilt Battery		20 x 7Ah (16 Opt.)	20 x 9Ah (16 Opt.)	20 x 9Ah (16 Opt.)
Charge Current	Standard Model	1A		
	Long Time Model	1A / 3.5A / 7A		
Recharge Time		8 hour		
ALARMS				
Utility Failure		Beep / 4sec		
Low Battery		Beep / 1sec		
Overload		Beep Twice / 1sec		
UPS Fault		Long Beep		
MANAGEMENT				
RS232 (Standard)/USB(Optional)		Supports Windows® 98/2000/2003/XP/Vista/2008/Windows® 7/8/10		
SNMP (Optional)		Power Management from SNMP Manager and Web Browser		
ENVIRONMENT				
Humidity		20-90% RH @ 0-40ºC (Non-Condensing)		
Noise Level		≤55 dB (1m)	≤60 dB (1m)	
DIMENSIONS & WEIGHT				
Dimension WxDxH (mm)		262 x 580 x 732 (S)	262 x 580 x 628 (H)	
Packaging Dimension WxDxH (mm)		359 x 687 x 937 (S)	359 x 687 x 832 (H)	
Net Weight (kg)		25.5 (H), 74.0 (S)	38.5 (H)	39.0 (H)
Gross Weight (kg)		29.0 (H), 83.5 (S)	47.0 (H)	47.5 (H)

• (S) means standard model, (H) means long time model.

POWERPACK SE RT SERIES

1-2-3 kVA 1:1 PHASE

ONLINE UPS

HOME/OFFICE | EMERGENCY | MEDICAL | INDUSTRY | DATA CENTER | TRANSPORT

VFI TYPE — UPS ONLINE
RACK/TOWER
PF= 0.9 — POWER FACTOR
PLUG & LAY — PLUG & PLAY

FEATURES

- High Frequency and True Double-Conversion
- DSP (Digital Signal Processors) Technology
- Input Power Factor Correction (PFC)
- Wide Input Voltage Range (110~300V)
- Output Power Factor 0.9
- Cold Start
- Auto Sensing Frequency
- ECO Mode Operation for Energy Saving
- Selectable Output Voltage via LCD
- Output Bypass Settable via LCD
- Power-On Self Test
- Advanced Battery Management (ABM)
- Short Circuit and Overload Protection
- Automatic Charging in Off Mode
- Auto Control Fan Speed when Loads Varies
- Standard RS232 Communication Port And RJ45 Protection
- USB/SNMP Communication Port *(Optional)*
- Emergency Power Off (EPO) *(Optional)*
- Extension Battery Bank *(Optional)*
- Built-In Isolation Transformer *(Optional)*

DETAILS

1. AC Input
2. DC Input
3. Breaker
4. Outlet
5. Fan
6. Modem/Tel/Fax
7. RS232
8. USB *(Optional)*
9. EPO *(Optional)*
10. SNMP/AS400 *(Optional)*

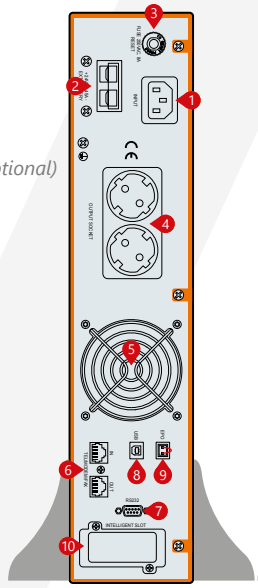

Rear Panel 1kVA

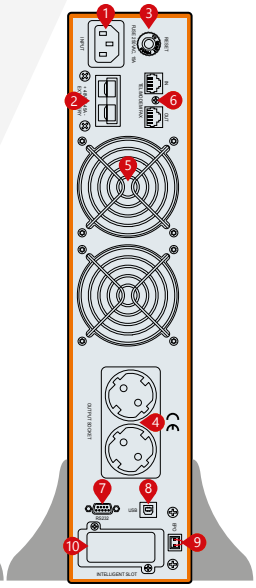

Rear Panel 2-3kVA

CERTIFICATES

CE PCT TSE

POWER FORLIFE

MAKELSAN® Uninterruptible Power Supplies

POWERPACK SE RT SERIES

1-2-3 kVA 1:1 PHASE

ONLINE UPS

MODEL									
Capacity	1kVA / 900W			2kVA / 1800W			3kVA / 2700W		
INPUT									
Rated Voltage	208V / 220V / 230V / 240 VAC								
Voltage Range	110~176 VAC (Linear Derating Between 50% and 100% Load); 176~280 VAC (No Derating); 280~300 VAC (Derating 50%)								
Frequency Range	45 ~ 70 Hz (Auto Sensing)								
Power Factor	≥0.99								
Bypass Voltage Range	-25% ~ +15% (Settable)								
OUTPUT									
Voltage Range	208V / 220V / 230V / 240 VAC (Settable via LCD)								
Voltage Regulation	±1%								
Frequency Range	45 ~ 55 Hz or 55 ~ 65 Hz (Synchronized Range); 50 / 60 Hz ± 0.1 Hz (Battery Mode)								
Waveform	Sinusoidal								
Crest Factor	3:1								
Harmonic Distortion	≤2% (Linear Load); ≤5% (Non-Linear Load)								
Transfer Time	Mains Mode to Battery Mode: 0ms Inverter Mode to Bypass Mode: 4ms (Typical)								
Overload Capability	105% ~ 125%: Transfer to Bypass in 1min; 125% ~ 150%: Transfer to Bypass in 30s; >150%: Transfer to Bypass in 300ms								
EFFICIENCY									
Mains Mode	≥90%			≥91%			≥92%		
Battery Mode	≥85%			≥86%			≥87%		
ECO Mode	≥95%			≥96%			≥97%		
BATTERY									
DC Voltage	24V	36V	36V	48V	72V	72V	72V	96V	96V
Inbuilt Battery	2 x 7Ah	3 x 7Ah	External	4 x 7Ah	6 x 7Ah	External	6 x 7Ah	8 x 7Ah	External
Charging Current (Max.)	1A		6A	1A		6A	1A		6A
Recharge Time	8h								
ALARMS									
Utility Failure	4s Per Beep								
Low Battery	1s Per Beep								
Overload	1s Twice Beep								
UPS Fault	Long Beep								
COMMUNICATIONS									
RS232 (Standard) / USB (Optional)	Supports Windows® 98/2000/2003/XP/Vista/2008/Windows® 7/8/10								
SNMP (Optional)	Power Management from SNMP Manager and Web Browser								
ENVIRONMENT									
Operating Temperature	0 ~ 40ºC								
Relative Humidity	0 ~ 90% (Non-Condensing)								
Noise Level	≤50 dB (1m)								
DIMENSIONS & WEIGHT									
Dimension WxDxH (mm)	440x468x88			440x658x88		440x468 x88	440x658 x88	440x468x88 (UPS) 440x440x88 (BAT)	440x468 x88
Packaging Dimension WxDxH (mm)	545x592x198			545x782x198		545x592 x198	545x782 x198	545x592x198 (UPS) 590x580x200 (BAT)	545x592 x198
Net Weight (kg)	12.26	13.78	7.58	22.73	25.86	9.66	29.26	9.45 (UPS) 27.2 (BAT)	10.04
Gross Weight (kg)	15.78	17.3	11.1	26.63	29.76	13.18	33.16	12.97 (UPS) 30.2 (BAT)	13.56

POWERPACK SE RT SERIES

6-10 kVA

1:1 PHASE

ONLINE UPS

HOME/OFFICE | EMERGENCY | MEDICAL | INDUSTRY | DATA CENTER | TRANSPORT

VFI TYPE — UPS ONLINE | RACK/TOWER | PF= 0.9 — POWER FACTOR | Service — SERVICE

FEATURES

- High Frequency and True Double-Conversion
- DSP (Digital Signal Processors) Technology
- Input Power Factor Correction (PFC)
- Wide Input Voltage Range (110~300V)
- Output Power Factor 0.9
- Cold Start
- Auto Sensing Frequency
- ECO Mode Operation for Energy Saving
- Selectable Output Voltage via LCD
- Output Bypass Settable via LCD
- Power-On Self Test
- Advanced Battery Management (ABM)
- Short Circuit and Overload Protection
- Automatic Charging in Off Mode
- Auto Control Fan Speed when Loads Varies
- Standard RS232 Communication Port and RJ45 Protection
- USB/SNMP Communication Port *(Optional)*
- Emergency Power Off (EPO)
- Extension Battery Bank *(Optional)*
- Built-In Isolation Transformer *(Optional)*

DETAILS

1. AC Input
3. DC Input
3. Outlet
4. Breaker
5. Fan
6. Modem/Tel/Fax
7. Parallel Card *(Optional)*
8. RS232
9. USB *(Optional)*
10. EPO
11. SNMP/AS400 *(Optional)*

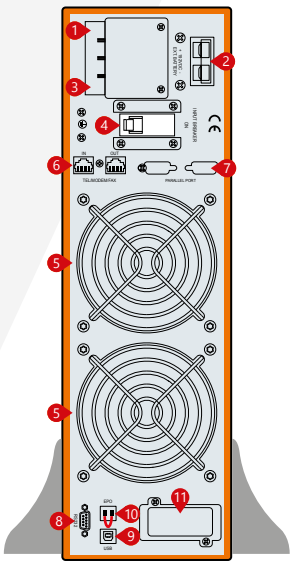

Rear Panel
6-10kVA

CERTIFICATES

CE PCT TSE

POWER FORLIFE

MAKELSAN®
Uninterruptible Power Supplies

MODEL			
Capacity		**6**kVA / **5400**W	**10**kVA / **9000**W
INPUT			
Related Voltage		208V / 220V / 230V / 240 VAC	
Voltage Range		Half Load (115-295) ±5 VAC, Full Load (165-295) ±5 VAC	
Frequency		40 ~ 70 Hz (Auto Sensing)	
Power Factor		≥0.99	
Bypass Voltage Range		160V - Rated Output Voltage +32V	
OUTPUT			
Voltage Range		208V / 220V / 230V / 240 VAC Setting Available via LCD	
Voltage Regulation		±1%	
Frequency		Synchronized with Utility in Mains Mode: 50 / 60 Hz ±0.2 Hz (Battery Mode)	
Waveform		Sinusoidal	
Crest Factor		3:1	
Harmonic Distortion		≤2% (Linear Load); ≤5% (Non-Linear Load)	
Transfer Time		Mains Mode to Battery Mode: 0ms Inverter Mode to Bypass Mode: 0ms	
Overload Capability		105% ~ 125% for 3min 125% ~ 150% for 30s >150% for 1s	
EFFICIENCY			
AC Mode		≥92%	
Battery Mode		≥91%	
ECO Mode		≥98%	
BATTERIES			
DC Voltage		192V	
Inbuilt Battery		16 x 7Ah	16 x 9Ah
Charge Current	Standard Model	1A	
	Long Time Model	1A / 3A / 5A / 8A	
Recharge Time		8h	
ALARMS			
Utility Failure		Beep / 4s	
Low Battery		Beep / 1s	
Overload		Beep Twice / 1s	
UPS Fault		Long Beep	
ENVIRONMENT			
Humidity		20-90% RH @ 0-40ºC (Non-Condensing)	
Noise Level		≤55 dB (1m)	
MANAGEMENT			
RS232 (Standard)/USB(Optional)		Supports Windows® 98/2000/2003/XP/Vista/2008/Windows® 7/8/10	
SNMP (optional)		Power Management from SNMP Manager and Web Browser	
PHYSICAL			
Long Time Model			
Dimension WxDxH (mm)		440 x 555 x 132	
Packing Dimension WxDxH (mm)		535 x 660 x 215	
Net Weight / Gross Weight (kg)		16.4 / 20.7	17.1 / 21.4
Standard Model			
Dimension WxDxH (mm)		440 x 555 x 132 (UPS), 440 x 555 x 132 (BAT)	
Packing Dimension WxDxH (mm)		535 x 660 x 215 (UPS), 540 x 685 x 235 (BAT)	
Net Weight / Gross Weight (kg)		16.4 / 20.7 (UPS), 43.6 / 47.1 (BAT),	17.1 / 21.4 (UPS), 49.6 / 53.1 (BAT)

POWERPACK 3300 SERIES

10-15-20 kVA

3:3 PHASE

ONLINE UPS

DATA CENTER | EMERGENCY | MEDICAL | INDUSTRY | TRANSPORT

VFI TYPE — UPS ONLINE | TOWER | PF= 0.9 — POWER FACTOR | Service — SERVICE

FEATURES

- High Frequency and True Double-Conversion
- DSP (Digital Signal Processors) Technology
- Input Power Factor Correction (PFC)
- Wide Input Voltage Range (110~300V)
- Output Power Factor 0.9
- Cold Start
- Auto Sensing Frequency
- ECO Mode Operation for Energy Saving
- Selectable Output Voltage via LCD
- 50Hz/60Hz Frequency Converter Mode Available
- Selectable Battery Low Voltage via LCD
- Power-On Self Test
- Advanced Battery Management (ABM)
- Short Circuit and Overload Protection
- Automatically Charging Battery at UPS Off Mode
- Fan Speed Auto Control when Load Varies
- Standard RS232 Communication Port
- USB/SNMP Communication Port *(Optional)*
- Emergency Power Off (EPO) *(Optional)*
- Extension Battery Bank *(Optional)*
- Built-In Isolation Transformer *(Optional)*
- Manual Bypass *(Optional)*
- N+X Redundancy Parallel *(Optional)*

DETAILS

1. RS 485 Port
2. Dry Contact Port
3. Parallel Port 1
4. Parallel Port 2
5. USB Port
6. RS232
7. EPO Port
8. Power Switch
9. Input Switch
10. Terminal Block
11. Intelligent Slot 1 (SNMP Card / Relay Card)
12. Intelligent Slot 2 (SNMP Card / Relay Card)
13. Maintenance Switch
14. Output Switch
15. Ground

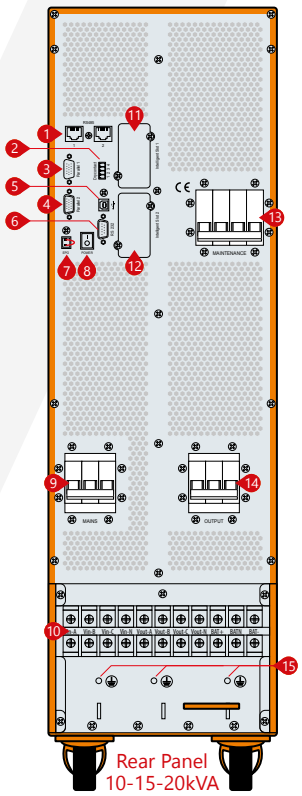

Rear Panel
10-15-20kVA

CERTIFICATES

POWERPACK 3300 SERIES

10-15-20 kVA 3:3 PHASE

ONLINE UPS

MODEL				
Capacity		**10**kVA / **9**kW	**15**kVA / **13,5**kW	**20**kVA / **18**kW
INPUT				
Related Voltage		380 / 400 / 415 VAC, (3Ph+N+PE) -20% +15%		
Voltage Range		208 - 478 VAC		
Frequency		50 Hz: 45-55 Hz; 60 Hz: 54-66 Hz (Auto Sensing)		
Power Factor		≥0,99		
Bypass Frequency Range		50-60 Hz ±10%		
Harmonic Distortion		≤3% (100% Non-Linear Load)		
ECO Range		Max. Voltage: 220V: +25% (Optional +10%, +15%, +20%), 230V: +20% (Optional +10%, +15%), 240V: +15% (Optional +10%)		
		Min. Voltage: -45% (Optional -20%, -30%)		
Generator		Compatible		
OUTPUT				
Voltage Range		380V / 400V / 415 VAC (3Ph+N+PE)		
Power Factor		0.9		
Voltage Regulation		±1%		
Frequency	AC Mode	±1%, ±2% , ±4%, ±5%, ±10% (Optional)		
	Battery Mode	50-60 ± 0.1 Hz		
Waveform		Pure Sinewave		
Crest Factor		3:1		
Harmonic Distortion		≤2% (Linear Load) ≤5% (Non-Linear Load)		
Transfer Time		Battery Mode to Inverter Mode 0ms, Inverter to Bypass Mode 0ms		
Output Dynamic Tolerance		At 100% Load ±5%		
Overload Capability	AC Mode	≤110%: 60min.; ≤125%: 10min.; ≤150%: 1min. ≥150% turn to Bypass Mode Immediately		
	Battery Mode	>150% Bypass Mode		
Parallel Operation		Optional		
EFFICIENCY				
AC Mode		93,5%	94,5%	
Battery Mode		92,5%	93,5%	
ECO Mode		98%		
BATTERY				
DC Voltage	Standard Model	±120 VDC	±120 VDC	
	Optional	±120 VDC		
Standard Model Inbuilt Battery		20 x 12V 9Ah	40 x 12V 7Ah	40 x 12V 9Ah
Charge Current	Standard Model	1,35 / 2,7 / 4,05A		
	Long Time Model	10A		
Typical Recharge Time		8 hour		
PROTECTION				
Full Protection		Overload, Short Circuit ve Battery Charge-Discharge Protection, RFI/EMI Filtre, IP20		
SYSTEM FEATURES				
Charge Current		Smart Charging System		
Over-temperature		Line Mode: Turn to Bypass; Backup Mode: Shut Down UPS Immediately		
Intelligent Alarm System		Line Failure, Low Battery, Overload, System Failure		
LED&LCD Monitor		Line Mode, Battery Mode, Bypass Mode, Battery Low, Overload & UPS Fault		
ALARM				
Utility Failure		Line Mode, Low Battery, Overload, System Fault		
Battery Low		Alarm and Shut Down		
Overload		Overload		
UPS Fault		System Fault		
PHYSICAL				
Dimensions WxDxH (mm)		828 x 250 x 868		
Packaging Dim. WxDxH (mm)		935 x 365 x 1055		
Net Weight (kg)		115	170	171
Gross Weight (kg)		143	198	199
ENVIRONMENT				
Operation Temperature		0°C~40°C		
Storage Temperature		-25°C~55°C		
Humidity		0%~90%		
Altitude		<1500 m		
Noise Level		<50 dB		
MANAGEMENT				
Communication Interface		USB, RS232, RS485, Parallel Port, Dry Contact, Smart Port, SNMP Card (Optional), Relay Card (Optional)		
Software		Muser4000, Sofeware		
Emergency Power Off		Dry Contact (Optional)		
STANDARDS				
Safety		IEC/EN62040-1, IEC/EN60950-1		
EMC		IEC/EN62040-2, IEC61000-4-2, IEC61000-4-3, IEC61000-4-4, IEC61000-4-5, IEC61000-4-6, IEC61000-4-8		

MST
SERIES

10-2000 kVA 3:3 PHASE
1-30 kVA 1:1 PHASE

STATIC VOLTAGE STABILIZER

INDUSTRY TRANSPORT MEDICAL

TOWER PF= 0.8 POWER FACTOR Service SERVICE

HIGHLIGHTS

- Microprocessor Controlled Voltage Stabilisation
- Precise Output Voltage Accuracy
- True Static-Modular Design with Thyristor Technology
- High Voltage Regulation Speed
- Maintenance Free

Highly Reliable and Endurable Static Design

- Microprocessor controlled Static design stabilizers automatically regulate and protect the loads against dangerous voltage changes.

- Compatible with all load types and offering independent phase control, they deliver ultra-fast response times in correcting under / over voltages, sags and surges - making them ideal for highly sensitive / mission critical loads and applications.

CERTIFICATES

CE PCT TSE

Standart Electrical Features

- Wide Input Voltage Range
- Precise Output Voltage Accuracy ±1% to ±5%
- Ultra Fast Voltage Regulation (500V/s)
- True 32-bit Microcontroller Controlled
- High Efficiency >97%
- Independent Phase Regulation to Correct Voltage aand Load Imbalance
- Electronic Protection Against to Over Load, Low Voltage, High Voltage, Over Temperature, Over Current and Short Circuit
- Overload Protection up to 150%
- Fast Responsive to Voltage Surges
- User Friendly, Easy and Comprehensive LCD Display and Mimic Diagram

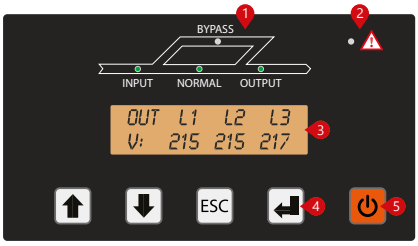

1. Input Led
   Bypass Led
   Normal Led
   Output Led
2. Alarm/Warning Led
3. LCD Display
4. Menu Keys
5. On/Off Button

- Advanced Alarm Menu
- Manual Bypass
- Auto Restart when Mains Available
- 512 Events Log Memory (Opt.)
- Full Electronic Static Structure with No Moving Parts, Delivering a 'Maintenance Free' Voltage Regulation Solution
- Compact Design with High Quality Material and Minimum Malfunction Hazard
- Designed, Manufactured and Supplied to Comply with
- Fully CE Compliant and Labelled

Flexibility

- Available at any required input voltage value and range.
- Available at any required output voltage value and tolerance from ±1% to ±5%.
- Output voltage can be adjusted by the LCD panel.
- Functionable with 50Hz and 60Hz.
- Optional MCCB can be added to the output to provide additonal protection.
- Optional automatic by-pass unit can be added to the output.
- Isolation transformer or voltage changing auto-transformer can be added for both input and output.
- Indoor and outdoor special cabinets with various IP protection classes can be provided.
- Optional EMC-filters at both input and output.
- Optional high-voltage protection and surge arrester.
- Input and output terminals can be designed and located specially on the cabinet.
- Optional Modbus.

MICROPROCESSOR CONTROLLED THYRISTOR TECHNOLOGY

Based on high speed semiconductor (Thyristor) technology and all digital microprocessor control, MST Series Static Voltage Stabilizers continuously monitor the incoming supply. Should the incoming voltage rise or drop, the stabilizers will automatically control the output to ensure the voltage reaching the load equipment always remains constant at the requisite voltage.

Inbuilt spike protection ensures the load is continuosly protected against harmful mains born high energy spikes and surges.

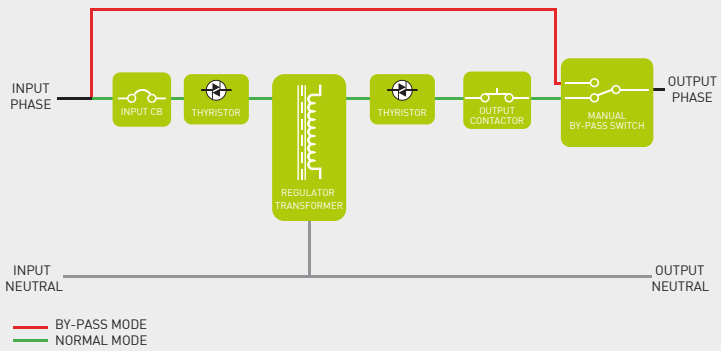

Static Voltage Stabilizer Single Line Diagram

DETAILS

MST SERIES 10-30 kVA

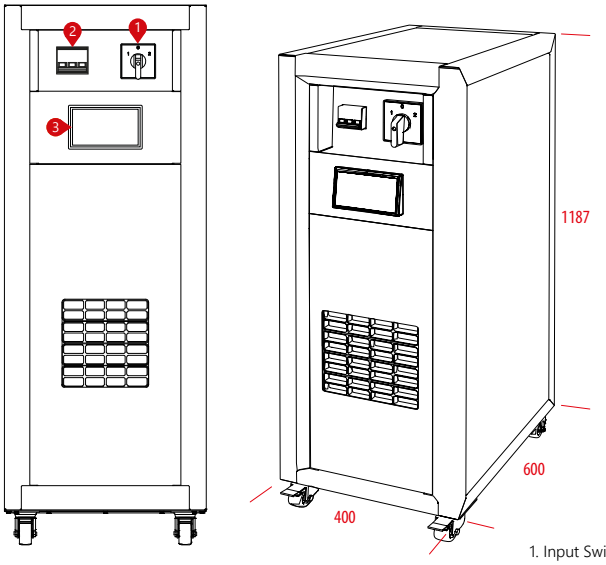

1. Input Switch
2. Output Switch
3. LCD Display

MST SERIES 40-60-75 kVA

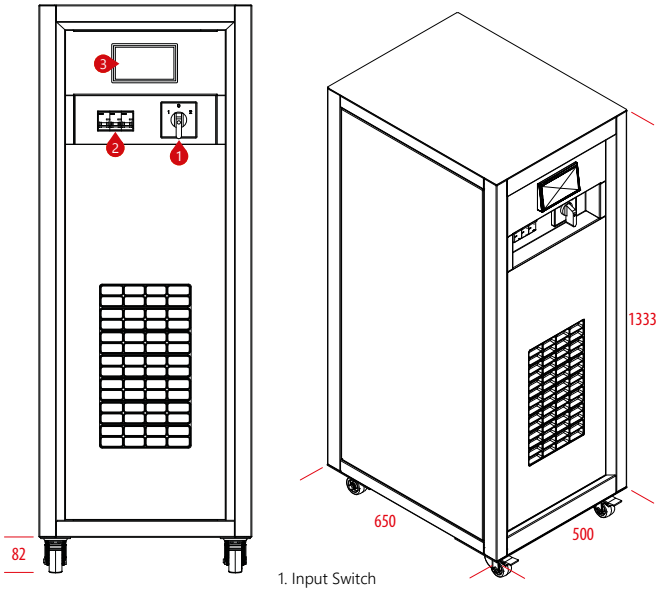

1. Input Switch
2. Output Switch
3. LCD Display

MST SERIES 100-120-150 kVA

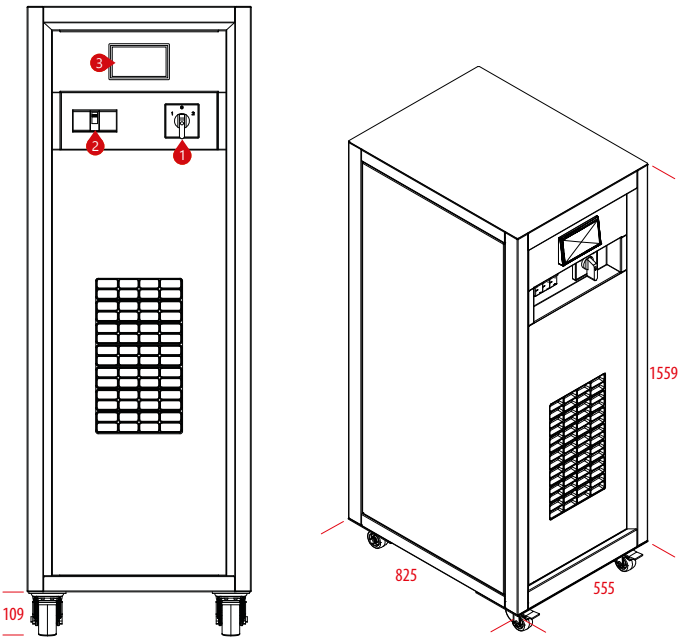

1. Input Switch
2. Output Switch
3. LCD Display

DETAILS

MST SERIES 200-300-400-500-600 kVA

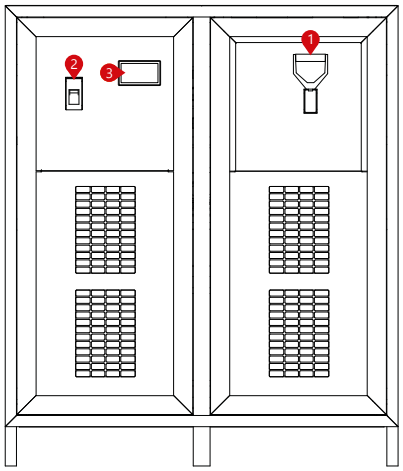

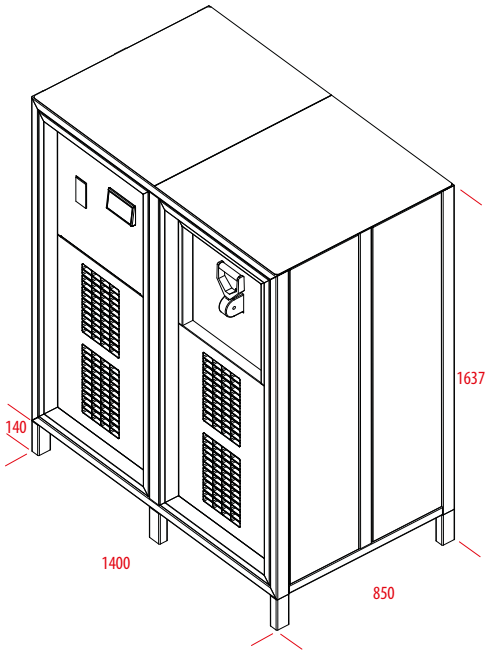

1. Input Switch
2. Output Switch
3. LCD Display

MST SERIES 800-1000-1250 kVA

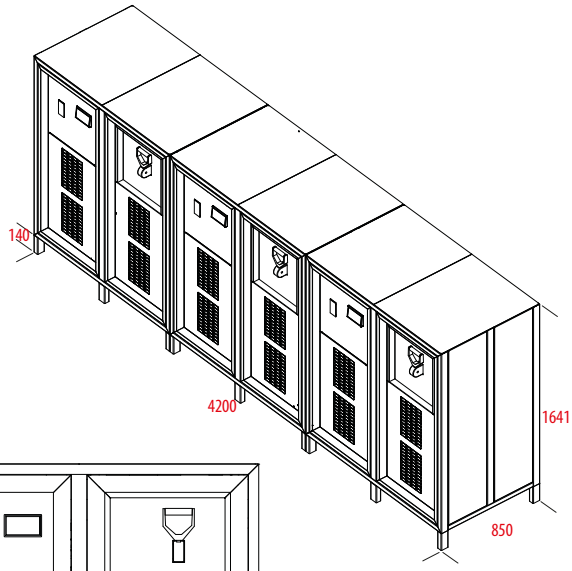

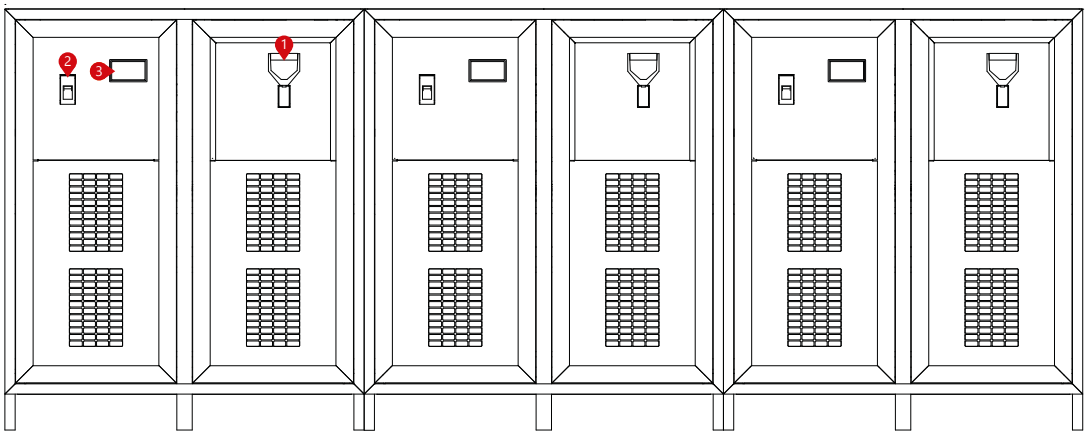

1. Input Switch
2. Output Switch
3. LCD Display

MODEL																					
Capacity (kVA)		10	15	22,5	30	45	60	75	100	120	150	200	300	400	500	600	800	1000	1250	1500	2000
INPUT																					
In. Vol. Correct. Interval		275~450 VAC (Optional: 190V~485V)																			
Operation Frequency		50~60 Hz (±10%)																			
Line Input Protection		Overcurrent Thermic Fuse																			
OUTPUT																					
Output Voltage		380 VAC RMS ±3% (Std.)				380 VAC RMS ±5% (Optional 1% to 5%)															
Overloading		10min 125% Load, 1min 150% Load, 10sec 200% Load, 20ms 500% Load																			
Correction Speed		500 Volt/sec																			
Upturn Period		20ms																			
Output Protection		Short Circuit, Overload, Overtemperature, Over and Low Voltage Protections																			
WORKING PRINCIPLE		Microprocessor Controlled, Full Automatic, Static, Semi Conductor Electronic Structure Maintenance Free																			
CONTROL PANEL																					
Display and Buttons		Load Level, Input-Output Voltage																			
Alert Message		Input Low/High, Output Low/High, Overtemperature																			
GENERAL																					
Efficiency		>97% (Full Load)																			
Mechanical Bypass		"Manually Controlled Line - PAKO SWITCH Selects Voltage Regulator" Switch Turn On/Off																			
Protection Level		IP20																			
Standard		TS EN 61000-6-2:2006, TS EN 61000-6-3:2007 (EMC), IEC60204-1+A1:2008 (LVD)																			
ENVIRONMENT																					
Operating Temperature		-10ºC~50ºC																			
Storage Temperature		-25ºC~60ºC																			
Relative Humidity		<90%, DIN (40040)																			
Altitude		<2000m																			
Noise Level		<50 dB				<55 dB			<58 dB			<58 dB		<63 dB							
DIMENSIONS & WEIGHT																					
Cabinet Dimensions (mm)	Width	400				500			555			1400					4200				
	Depth	600				650			825			850					850				
	Height	1187				1333			1559			1637					1637				
Weight (Kg)		80	95	112	120	175	203	233	277	320	369	639	775	857	930	2500	2750	3500	3750	4500	5500

MODEL									
Capacity (kVA)		1	2	3	7,5	10	15	20	30
INPUT									
In. Vol. Correct. Interval		120~230 / 145~245 / 160~250 VAC							
Operation Frequency		50~60 Hz (±10%)							
Line Input Protection		Overcurrent Thermic Fuse							
OUTPUT									
Output Voltage		380 VAC RMS ±3% (Std.)	380 VAC RMS ±5% (Optional 1% to 5%)						
Overloading		10min 125% Load, 1min 150% Load, 10sec 200% Load, 20ms 500% Load							
Correction Speed		500 Volt/sec							
Upturn Period		20ms							
Output Protection		Short Circuit, Overload, Overtemperature, Over and Low Voltage Protections							
WORKING PRINCIPLE		Microprocessor Controlled, Full Automatic, Static, Semi Conductor Electronic Structure Maintenance Free							
CONTROL PANEL									
Display and Buttons		Load Level, Input-Output Voltage							
Alert Message		Input Low/High, Output Low/High, Overtemperature							
GENERAL									
Efficiency		>97% (Full Load)							
Mechanical Bypass		"Manually Controlled Line - PAKO SWITCH Selects Voltage Regulator" Switch Turn On/Off							
Protection Level		IP20							
Standard		TS EN 61000-6-2:2006, TS EN 61000-6-3:2007 (EMC), IEC60204-1+A1:2008 (LVD)							
ENVIRONMENT									
Operating Temperature		-10ºC~50ºC							
Storage Temperature		-25ºC~60ºC							
Relative Humidity		<90%, DIN (40040)							
Altitude		<2000m							
Noise Level		<50 dB							
DIMENSIONS & WEIGHT									
Dimensions (mm)	Width	192		260			430		
	Depth	361		453			596		
	Height	352		416			777		

MSR
SERIES

3-3000 kVA 3:3 PHASE
1-50 kVA 1:1 PHASE

SERVO VOLTAGE STABILIZER

INDUSTRY TRANSPORT MEDICAL

Servo Drive Structure, Microcontroller Controlled Heavy Duty Devices which Regulates Mains Voltage for Critical Loads

(P-P) 208/220/230/240/380/400/415/440/460/480/500 V
IP20, IP21, IP31, IP44, IP54,
Versions Available

FEATURES

- Non-Linear Charges Drive
- Wide Power and Voltage Interval
- Fast Regulation
- High Reliability Thanks to Microprocessor and Smart Driver
- High Efficiency
- Load Transfer to Bypass Via Pole Charge Switch
- Safe and Economic Usage
- Digitally Displayed Status, Input & Output Measurements

CERTIFICATES

MODEL (3:3 Phase)																									
Capacity (kVA)	3	6	10,5	15	22,5	30	45	60	75	100	120	150	200	250	300	400	500	600	800	1000	1250	1600	2000	2500	3000

MODEL (1:1 Phase)													
Capacity (kVA)	1	2	3,5	5	7,5	10	15	20	25	30	40	50

INPUT	
In. Vol. Correction Interval	**1:1 Phase:** 160~260 VAC • **3:3 Phase:** 275~450 VAC (Standard), 215~415 VAC (Optional)
In. Vol. Working Interval	**1:1 Phase:** 90~285 VAC • **3:3 Phase:** 155~490 VAC
Operation Frequency	47~65 Hz
Line Input Protection	Overcurrent, Low and High Voltage Protection (Optional)
OUTPUT	
Output Voltage	**1:1 Phase:** 220 VAC RMS ±2% • **3:3 Phase:** 380 VAC RMS ±1%
Overloading	10sec 200% Load
Correction Speed	~90 Volt/sec
Upturn Period	~90 Volt/sec (160 VAC~250 VAC)
Output Protection	Short Circuit - Overcurrent Protection, Overvoltage Protection (Optional)
WORKING PRINCIPLE	Servo Motor, Microprocessor Controlled, Full Automatic
GENERAL	
Cooling	Smart Fan System
Measured Value Monitor	MSR Panel Voltmeter (74x74mm) Output Voltage and Line Voltage Monitorization
Total Efficiency	**1:1 Faz:** >96% • **3:3 Faz:** >97%
Mechanical Bypass	"Manually Controlled Line-PAKO SWITCH Selects Voltage Regulator" Switch Turn On/Off
Protection Level	IP 20
ENVIRONMENT	
Operating Temperature	-10°C~50°C
Storage Temperature	-25°C~60°C
Relative Humidity	<90%, DIN (40040)
Altitude	<2000m
Noise Level	<50 dB (1 metersquare)
Documents	CE/TÜV Austria Hellas (ISO 9001)

MODEL (3:3 Phase)																										
Capacity (kVA)		3	6	10,5	15	22,5	30	45	60	75	100	120	150	200	250	300	400	500	600	800	1000	1250	1600	2000	2500	3000
DIMENSIONS & WEIGHT																										
Cabinet Dimensions (mm)	Width	500					600		850			900		600			600			700			800		1400	1400
	Depth	440					440		640			690		700			1170			800			1000		1000	1000
	Height	1100					1190		1400			1630		1720			1700			1850			1950		1750	2050
Net Weight (Kg)		55	65	120	135	154	183	237	330	356	456	545	565	1050	1150	1250	1500	2000	2500	2750	3500	3750	4500	5500	7000	8500

MODEL (1:1 Phase)														
Capacity (kVA)		1	2	3,5	5	7,5	10	15	20	25	30	40	50
DIMENSIONS & WEIGHT													
Cabinet Dimensions (mm)	Width	420		450		550		600	500			500	
	Depth	230		350		350		400	500			700	
	Height	230		270		270		320	850			850	
Net Weight (Kg)		15	16	29	40	47	55	75	125	136	163	180	210

MFC
SERIES

10-1000 kVA 3:3 PHASE
FREQUENCY CONVERTER

DATA CENTER | MEDICAL | TRANSPORT | INDUSTRY | EMERGENCY

Three LEVEL TECHNOLOGY 3

96% Efficiency

TOWER | PF= 0.9 POWER FACTOR | Service SERVICE

FEATURES

- True Three Level Rectifier & Inverter Techonogy
- Output Power Factor 0.9 (1 Optional)
- IGBT PWM Rectifier & Inverter Technology
- DSP Control
- Ultra High Efficiency up to 96%
- Low Input Current THD (<3%)
- High Input Power Factor (>0.99)
- Wide Input Voltage Range (Optional)
- Advanced Battery Management
- Short Circuit and Overload Protection
- Paralellable Modules up to 8 units
- 500 Real Time Event Log with Detailed Parameters
- Static&Manual Bypass Operation
- Overload and Short Circuit Protection
- Small Footprint and Easy Maintenance
- Advanced Communication Capabilities
- Perfect Generator Compatibility
- EPO (Emergency Power Off)
- Capacitive Kit Option
- Auto Restart

CERTIFICATES

TÜV SÜD — The *LevelUps Series* is certified by TÜV SÜD with regard to product safety (EN 62040-1)

BUREAU VERITAS Certification — The *LevelUps Series* is attested by Bureau Veritas with regard to performance (EN 62040-3)

CE PG TSE

Higher Level of Efficiency than the EU CoC for AC Ups

MODEL																			
Capacity	10kVA	15kVA	20kVA	30kVA	40kVA	60kVA	80kVA	100kVA	120kVA	160kVA	200kVA	250kVA	300kVA	400kVA	500kVA	600kVA	800kVA	1000kVA
Power Watt	9kW	13.5kW	18kW	27kW	36kW	54kW	72kW	90kW	108kW	144kW	180kW	225kW	270kW	360kW	450kW	540kW	720kW	900kW
INPUT																		
Nominal Voltage	400 VAC 3 Phase +N																	
Voltage Tolerance	-20% +15%																	
Frequency Tolerance	50 / 60 Hz ±10% (Selectable)																	
Power Factor	>0.99																	
Total Harmonic Distortion	THDi <%3																	
OUTPUT																		
Power Factor	1.0											0.9 (1 Optional)						
Nominal Voltage	380/400/415 VAC 3 Phase + N																	
Voltage Tolerance	Static ±1, Dynamic ±3																	
Frequency Tolerance	50Hz / 60Hz ±0,01% (Battery Mode)																	
Output THD	Linear Load <1% / Non-Linear Load <3%																	
Crest Factor	3:1																	
Overload Capacity*	At 125% Load 10min, at 150% Load 1min																	
Efficiency (Online Mode)	96%																	
Efficiency (Eco Mode)	Up to 99%																	
BYPASS																		
Nominal Voltage	380/400/415 VAC 3 Phase + N																	
Voltage Tolerance	15% (Configurable from 10% to 30%)																	
Frequency Tolerance	±5 (Selectable)																	
ENVIRONMENT																		
Running Temperature	For UPS 0°C~40°C For Battery 0°C~25°C																	
Storage Temperature	For UPS 15°C~45°C For Battery -10°C~60°C																	
Protection Class	IP20																	
Humidity	0-95% Without Condensation																	
Altitude	<1000m, Correction Factor 1. <2000m, Correction Factor >0.92, <3000m; Correction Factor >0.84																	
Noise Level	<53 dBA		<55 dBA		<60 dBA		<65 dBA			<72 dBA					<74 dBA			<75 dBA
COMMUNICATION																		
Communication Port	RS232 (Standart), RS485, MOD-Bus, J-Bus, Web, Tel-Net, GPRS, CAN-Bus, SNMP (Option)																	
STANDARDS																		
Quality	ISO 9001, ISO 14001, ISO 18001, TSE-HYB																	
Performance	EN62040-3 (VFI-SS-111, Bureau Veritas Certified)																	
EMC/LVD	EN62040-2, EN62040-1, EN60950, (TÜV SÜD Certified)																	
DIMENSIONS & WEIGHT																		
Cabinet Dimensions (mm) Width	490					763		810		830			1250			2345		
Cabinet Dimensions (mm) Depth	805					771		820		870			845			485		
Cabinet Dimensions (mm) Height	1190					1555		1705		1800			2102			2003		
Net Weight (kg)	100	100	107	118	125	260	270	350	355	450	460	470	850	850	850	1740	1740	1990
Packaging Dimensions (mm) Width	600					600		900		900			1370			2445		
Packaging Dimensions (mm) Depth	900					900		970		970			870			585		
Packaging Dimensions (mm) Height	1400					1400		2040		2040			2120			2250		
Gross Weight (kg)	140	141	145	164	185	353	361	376	387	398	491	500	890	890	890	1820	1820	2070

* under certain conditions.
3 Phase in / 1 Phase Out Version is Available. (10 to 30kVA)

CUSTOMIZED
POWER SOLUTIONS

OUTDOOR TRANSPORT INDUSTRY EMERGENCY

A full range of custom and rugged AC&DC Power Solutions to meet with your specific requirements and where a standard UPS will not be suitable.

SOLUTIONS

- Containerised Power Systems
- Outdoor AC&DC Power Systems
- Marine/Offshore AC&DC Power Systems
- Defence Power Systems
- Custom DC Systems/Chargers
- Standalone or Modular Design Tailored to the Requirements

CONTAINERISED POWER SYSTEMS

- Makelsan's containerised solutions integrates Makelsan UPS and Generator together where the UPS supports critical loads without interruption until the generator kicks in. With the "True no break power solution", business continuity without costly downtime is ensured.

- Cost effective and energy saving - all in one solution. It features high reliability and security, Fast deployment, best mobility, energy saving and is suitable for a wide variety of applications and also applicable to special mobile scenarios.

Telecom Marine ITS Traffic Military/Defence Power Distribution Oil and Gas Railway Alternative Power

Features

- Complete containerised UPS system up to 1000kVA 3Phase
- Up to 96% efficiency
- Integrated transfer and bypass switches
- Fully bunded ISO container
- Personnel and maintenance access doors
- Digital controls for UPS and switchgear
- Fire detection and protection
- Air conditioned UPS and battery compartments
- Environment control system.

1. Active Power Unit: UPS/ Power Converter/Freq. Converter etc.
2. Main AC In/Out Electrical Panel
3. Internal AC Distribution Electrical Panel
4. Battery Breaker Panel
5. AC Aircon
6. Cable Tray
7. Cable Tray
8. Hyrdojen Gas Release
9. Active Power Unit/ Battery Compartments Seperation
10. Air Baffle
11. Cables Conduit

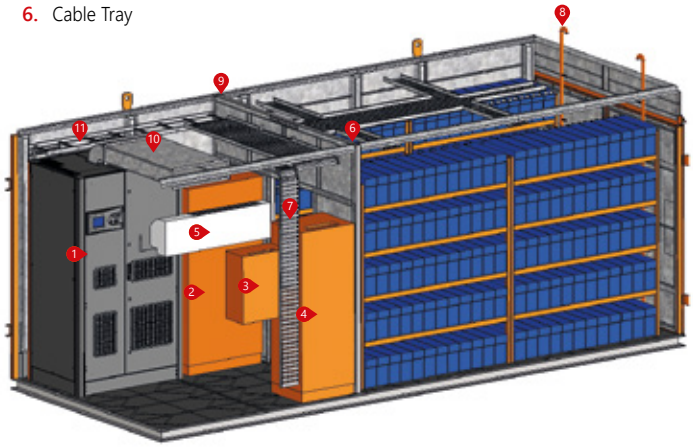

OUTDOOR AC&DC POWER SYSTEMS

Features

- Designed to operate under extreme temperature conditions (-40C to +74C)
- Made of rugged electric and electronic components:
- Due to fact that the UPS is designed for extreme conditions, the elements that maket he UPS are also designed for extreme conditions
- Conformal coated PCB's protect against exposure to moisture and high humidity environment
- Thermostatically controlled battery heater mats available
- Temperature compensation utilized to effectively manage the battery charge voltage based on temperature
- Remote monitoring via SNMP web based communication
- Built in AVR (Automatic Voltage Regulation) allows for a wider input voltage range for World-wide use
- Enhanced surge protection capability (TVSS- Transient
- Voltage Surge Suppressor, LAP (Lighting Arrestor Protection)
- Enclosures meet specific ingress protection (IPXX) standard for extreme environments (Zone 4 earthquake, rain test, dust, impact test, etc)

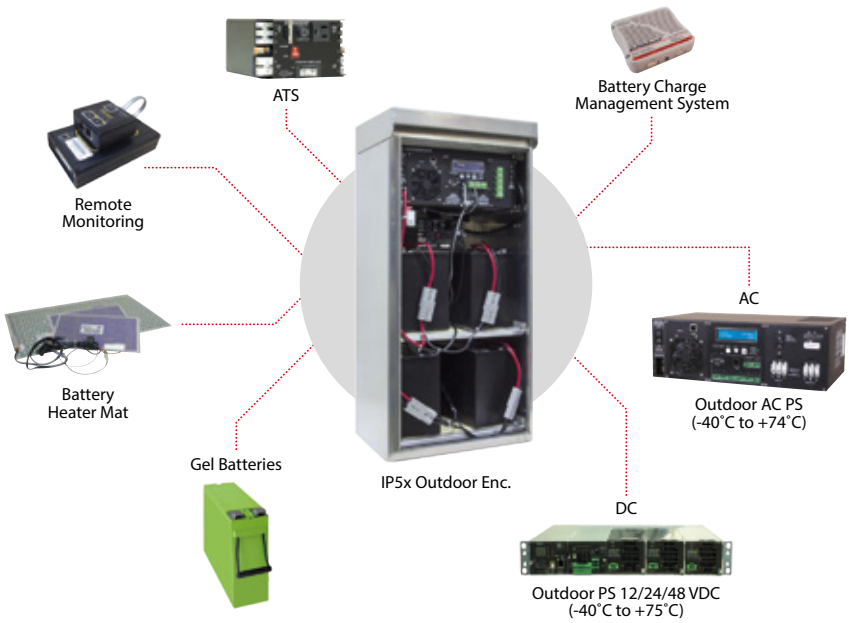

Outdoor AC&DC UPS Systems for Intelligent Transportation/Traffic/Security Sytems

Applications

- Intelligent Transportation Systems
- Security Applications (Sea/Land/Airport)
- Telecom Applications
- Defence/Military Backup Systems
- Railway Applications
- Marine/Offshore Applications
- Industrial Applications

Customized Railway UPS System can take Inputs from both a 25kV Overhead Line as well as a 400VAC Mains Supply. Available in Single Phase and Three Phase

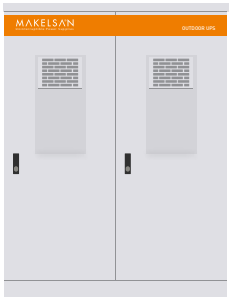

IP 65 AC Standalone UPS Systems 1-20kVA with Built-in Batteries

IP 31-41 High Reliable and Robust 3 Phase AC Standalone Makelsan UPS Designed for Most Harsh Industrial Processes

CUSTOM DC SYSTEM/CHARGERS

Makelsan offers a comprehensive range of DC power protection products available in standalone or 19" rack, modular configurations.

- Chargers - Single or Three Phase. 12/24/48/110/220VDC
- Power Supplies 12/24/48/110/220VDC
- DC UPS - 12-220VDC / 10A-10000A
- DC Rectifiers
- DC-AC Industrial Single/Three Phase Modular Inverters
- DC Load Distribution Panels

110VDC/200A, Hotswappable/Upgradable DC System in IP41 Cabinet with 2 Groups of 12V FT Batteries and Remote Access

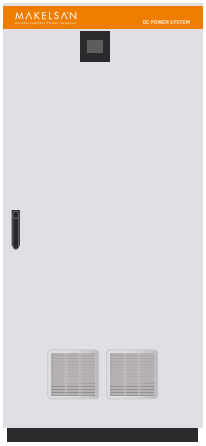

110VDC/40-10000A DC Power System

8X2V3000Ah Battery Change Over System Easy Change Over of 2V 1000-3000Ah Telco Batteries for Test/Maintenance Purposes

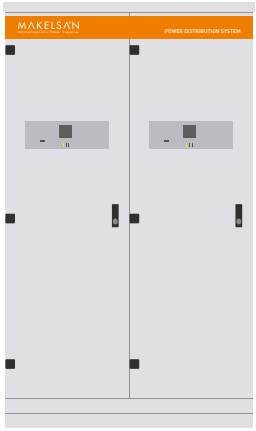

48VDC Power Distribution Panel with Remote Monitoring of DC Voltage and Currents


POWER
FORLIFE

PRECISIONCOOLING
SYSTEMS

DATA CENTER

HIGHLIGHTS

- Precisely Control Temperature and Humidity
- High Air Volume for Circulation
- Designed for 7×24 Running High Availability
- Powerful Monitoring Access

Highly Reliable and Efficient Cooling Solutions

• Precision cooling is an air conditioning or cooling technique that is specifically designed for use in IT equipment and environments and is implemented in devices that directly cool electronic and IT equipment. It has better air filtration capabilities, higher air flow and advanced humidity control mechanisms than standard cooling techniques.

• Makelsan offers Precision Cooling solutions in order to provide optimized and efficieny methods for data center cooling.

CERTIFICATES

CE TSE

FLEXAIR

SERIES

25-150 kW

PRECISION COOLING

DATA CENTER

A perfect Precision Air Conditioner Solution that Combines Efficiency, Reliability, Environment Protection, Flexibility

Flexibility

FlexAir precision air conditioner is available with 7 kinds of cooling types, 6 kinds of frames, upflow & downflow, wide cooling capacity range and any other customized configuration, to meet your specified requirements.

Advanced and Reliable Intelligent Control System

Group working mode (achieve energy saving operation, rotating operation and rotating when main unit fails) Remote monitoring access with common protocol, Optional 5.7" (320*240) color touch screen, Status and alarm display by diagram, Display and setting the environmental parameters, Multiple level password protection, Auto restart.

High Strength Test Verification

Every FlexAir unit was fully tested and verified to be able to run under extreme condition.

Highly Efficient and Stable System Matching Design

The refrigeration system of FlexAir was carefully designed. Better heat exchanging effect, better flow control, better air distribution to make unit more efficient and more robust.

High Quality Components

FlexAir unit is made of carefully selected components. Compressor, fan, valves, control system, heating and humidifying system are all industry recognized brands, which keep the unit reliable and long life.

7 Kinds of Cooling Types

FlexAir is available with 7 kinds of cooling types: air cooled, water cooled, chilled water, glycol cooled, air dual cooled, water dual cooled and dual chilled water systems. The dual cooling system of FlexAir series precision air conditioner is better in the aspect of redundancy, and stronger fault strain ability.

Customized Options

Per requirement, MAKELSAN is ready to go to design a suitable cooling solution only for you.

Flexible Capacity Configuration

Every FlexAir unit has a separate control system, supporting ground working mode, or stand alone working mode. It can be planed and deployed as your business changes.

Wide Cooling Capacity Range

The cooling capacity of FlexAir is from 25kW to 150kW and is extendable to 200kW above, to overcome the mega data center capacity challenges.

Modular Structure Design

Compact Footprint, Easier Service, Easier Transportation. The FlexAir is designed with modularity mechanical frame. The unit can be torn down to several modular sub-assemblies. It is easy to be transported to site wherever the lift space is limited. It can be front serviced for all components, the flank and back side also can be opened.

Adaptable Modular Assembly

FlexAir is built with high quality modular assembly, which is adjustable to match your data center design choice.

- Fan assembly
- Humidifying assembly
- Throttling assembly
- Heating assembly
- Cooling assembly

6 Kinds of Frame Sizes

The FlexAir full capacity ranges are built with 6 kinds of frame sizes, and each size is compatible with up flow and down flow. The depth of unit is 850mm, the height is 1960mm, and the width is from 850mm to 2810mm.

SMOOTHAIR

SERIES

5-20 kW

PRECISION COOLING

DATA CENTER

A perfect Precision Air Conditioner
A Solution for Small and Medium-sized Data Center

Green and Energy-Saving

High EER: Dictated matching of refrigeration system to ensure high energy efficiency ratio. High Sensible Heat Ratio: Designed with large air volume and small enthalpy difference to ensure the high sensible heat ratio. Green Refrigerant: R410a.

High Reliability

Choosing the high efficient and high reliability scroll compressor and backward centrifugal fan to guarantee the long life and high EER of the units. Using the industry recognized brand of high quality components to ensure the high reliability. All products went through rigorous testing.

Designed to Operate 7x24

- Makelsan Precision air conditioners are designed to operate for 365day*24hours non-stop in high efficiency and reliable status.
- The unit is designed to work under extreme weather condition, temperature down to -40°C when configured with the Low Temperature Kit.
- Step less speed regulating outdoor fan system. Unit adaptable to all different outdoor condition.
- Thermal expansion valve ensures, which ensures system be quick response to the changing working condition.

Applications

Small and medium-sized computer room Equipment room, Powerhouse Outdoor electronic house and communication equipment room Laboratory, testing room, storage room Computer room of commercial building.

Intelligent Controller

- Precise microcomputer control system, large-screen display, with multi-level password protection and experts fault diagnosis function.
- Equipped with the standard RS485 communication interface and supported the remote monitoring. Wide input voltage design, with lack phase protection and self-recovery after power resume. It can achieve the phase switching automatically to ensure the uninterrupted working.
- It can flexibly switch from the main unit to the backup unit automatically to achieve the automatic switch and rotation.

Flexible Application

- Makelsan Precision air conditioners have flexible configuration options for different project and meet the different needs of users.
- Flexible installation: quick connectors.
- Factory supplied with the connecting copper pipes, refrigerant and mounting brackets of outdoor unit. (ST005\ST007\ST012)
- Avariety of air supply modes: upflow, downflow, front-flow and underflow.
- A variety of refrigeration types: air-cooled, water-cooled, chilled water and glycol-cooled and dual cooling system
- Rich options: EC fan, electronic expansion valve, high efficiency filter and special humidifier
- Customized solutions: High or low temperature environmental solutions, low noise solutions, high altitude solutions, large air volume or high ESP solutions, long pipe connecting or high drop solutions.
- Small footprint, 100% front maintenance.

INTENSEAIR

SERIES

25-65 kW

PRECISION COOLING

DATA CENTER

A perfect Inrow Precision Air Conditioner
A Solution for High Heat Density
Data Center

Precise and Measurable Cooling

Matching to the heat source, the IntenseAir series inrow precision air conditioner directly cools the high temperature hot air from the servers, shortens the air flow path, prevents the energy waste of cold and hot air mix. Through the real-time monitoring of the heat source load, it accurately regulates the cooling output and the air flow output, make the cooling capacity and air volume accurate and predictable, realizes the targeted and accurate cooling, perfectly solves the high heat density problems of data centers.

IntenseAir Series Inrow Cooling Characteristics

- More Reasonable and Accurate Air Distribution
- Real-time Monitoring of the Heat Load
- Flexibility and Compatibility of the Space Application
- Dynamic Coordination Output
- Precise Air Volume Control
- Step Less Speed Regulating Compressor
- Electronic Expansion Valve

Unit Configuration of the IntenseAir Series

- Advanced Intelligent Controller
- Multiple Sets of the Temperature Sensor
- Support Network Group Control of Multiple Units
- Convenient Installation and Maintenance
- 4 Kinds of Air Supply Types
- Components Configuration of DX Unit
- Components Configuration of Chilled Water
- 3 Kinds of Cooling Types

MSBP
SERIES

25-400 A
SERVICE BYPASS PANEL

3 PHASE — 3/4 Poles: 380/400/415V

1 PHASE — 2 Poles: 200/208/240V

IP 20/21/31/41/54

HIGHLIGHTS

- Isolation of UPS from Connected Loads for Maintenance with No Loss of Network Availability
- Switch Disconnector and MCCB Types are Available
- Heavy Duty Buswork

Total Electrical And Physical Isolation of the UPS without Break to the Load

- A maintenance bypass allows a UPS system to be serviced without disruption to the connected loads.
- Makelsan can supply External Maintenance Bypass Panels as wall or rackmounted units. For larger three phase UPS installations, they can be supplied as maintenance bypass cabinets with associated switchgear.
- Whilst larger UPS systems have a built-in maintenance bypass, an external maintenance bypass allows the complete UPS system to be isolated for safer on-site working or removal, upgrade and swap-out.
- The bypass panels may be filtered to provide additional protection and load isolation.
- As part of switchgear panels, bypass systems can include interlocks and custom specifications.
- Compatible with Makelsan 3 Phase UPS systems.

CERTIFICATES

FEATURES

- Makelsan can supply External Maintenance Bypass Panels as wall or rackmounted units. For larger three phase UPS installations , they can be supplied as maintenance bypass cabinets with associated switchgear.
- A maintenance bypass allows a UPS system to be serviced without disruption to the connected loads.
- Whilst larger UPS systems have a built-in maintenance bypass, an external maintenance bypass allows the complete UPS system to be isolated for safer on-site working or removal, upgrade and swap-out.
- The bypass panels may be filtered to provide additional protection and load isolation. Maintenance bypass panels can also remote alarms (volt-free contact signals) and local AC power sockets.
- As part of switchgear panels, bypass systems can include interlocks and custom specifications.
- Maintenance bypass units are supplied matched to Makelsan UPS models. Custom bypass panels can be specified and sourced through Makelsan engineering team.

Amper	Code		Description	Size (WxHxD)
25A	MSBP0025A01HV1-SW1	3/1	Input-Output=4 Pole By Pass=2 Pole	568 x 623 x 197
32A	MSBP0032A01HV1-SW1	3/1	Input-Output=4 Pole By Pass=2 Pole	568 x 623 x 197
40A	MSBP0040A01HV1-SW1	3/1	Input-Output=4 Pole By Pass=2 Pole	668 x 722,5 x 220
63A	MSBP0063A01HV1-SW1	3/1	Input-Output=4 Pole By Pass=2 Pole	669 x 722,5 x 220
25A	MSBP0025A01HV2-SW2	3/3	Input-Output=4 Pole By Pass=4 Pole	468 x 524,8 x 165,9
40A	MSBP0040A01HV2-SW2	3/3	Input-Output=4 Pole By Pass=4 Pole	468 x 524,8 x 165,9
63A	MSBP0063A01HV2-SW2	3/3	Input-Output=4 Pole By Pass=4 Pole	468 x 524,8 x 165,9
80A	MSBP0080A01HV2-SW2	3/3	Input-Output=4 Pole By Pass=4 Pole	468 x 524,8 x 165,9
125A	MSBP0125A01HV2-SW2	3/3	Input-Output=4 Pole By Pass=4 Pole	668 x 730 x 219
160A	MSBP0160A01HV2-SW2	3/3	Input-Output=4 Pole By Pass=4 Pole	668 x 730 x 219
200A	MSBP0200A01HV1-TM1	3/3	Input-Output=3 Pole By Pass=4 Pole	568 x 800 x 223
250A	MSBP0250A01HV1-TM1	3/3	Input-Output=3 Pole By Pass=4 Pole	568 x 800 x 223
300A	MSBP0300A01HV1-TM1	3/3	Input-Output=3 Pole By Pass=4 Pole	868 x 1000 x 279
400A	MSBP0400A01HV1-TM1	3/3	Input-Output=3 Pole By Pass=4 Pole	868 x 1000 x 279

OPTIONS

- V/I Meters
- Power Analyzer
- Load Distribution

MSBP SERIES External Service Bypass Panels

SBP - Switch Disconnector Key Type
(Input-Output=4 Pole Bypass=4 Pole)

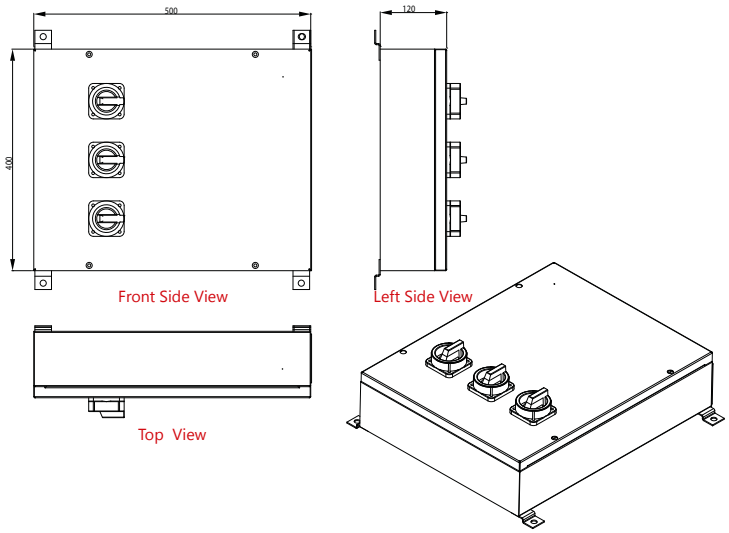

SBP - Thermal Magnetic Circuit Breaker Key Type
(Input-Output=3 Pole By Pass=4 Pole)

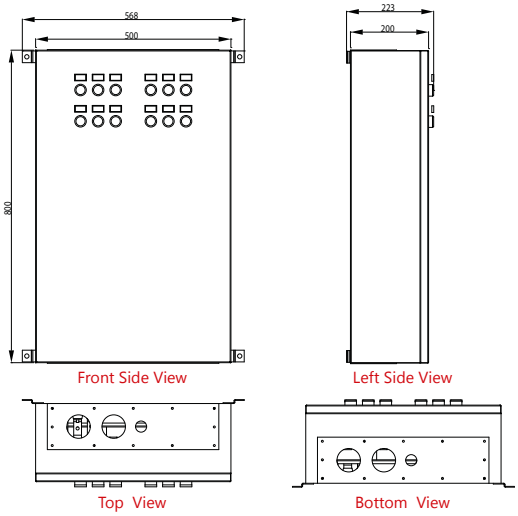

MSW
SERIES

1 PHASE **12/24VDC: 10A-300A**

SWITCH MODE (HF) BATTERY CHARGER

Usage Areas:
- Vessels and Yachts
- Shipyards
- Rail Systems
- Hydroelectric Power Plants
- Solar Power Plants
- Automobile Services
- Electrical Devices

HIGHLIGHTS

- Switch Mode Technology
- Voltage Controlled Automatic Charging
- Can Be Used as DC Power Supply
- 1 Phase & 3 Phase Wide Power Range
- High Efficiency and Reliability
- Electronic Protections
- Up to 30% Energy Saving

New Generation Switch Mode Charging Rectifiers

• Makelsan Switch Mode Charging Rectifiers are designed with the state of the art technology for charging batteries and DC energy needs of devices supplied by direct current.

• Batteries would be charged much safer with the improved software and special charging program. Non-complex structure, easy maintenance properties, user friendly program and other superior features will meet all requirements.

• The most important feature of the device is it can be used as supply source as well as a battery charger. Besides low ripple factor increases the battery life. It's an ideal solution for where device weight and dimensions are problem.

CERTIFICATES

MSW SERIES
12/24VDC: 10A-300A 1 PHASE
SWITCH MODE (HF) BATTERY CHARGER

MODEL	
INPUT	
Input Phase	1 Phase - 2 Phase - 3 Phase (Special Design)
Input Voltage Tolerance	±10%
Input Frequency	50 - 60 Hz
Power Factor	0.98
THDi	<%10
OUTPUT	
Output Current	10A - 300A
Output Voltage	12V - 24V
Ripple	≤1 Ripple
GENERAL	
Cooling	Air Cooling
Isolation Voltage	1500 VAC Input / Chassis Bridge, 500 VAC Output / Chassis Bridge, 500 VAC Between Input and Output
Insulation Class	IP 20 - RAL 7032 (Special Design)
Efficiency	90%
Operating Temperature	-20/50°C
Operating	Ability to set Charge Mode for all Battery Types
Input / Output Connections	Serial Connector - W Otomation
PROTECTION	
Heat Protection	Input / Output Overtemperature Protection
Measure	Output Overcurrent Protection - DC High Low - DC Leakage - Mains Failure
TECHNOLOGY	
IGBT	Switch Mode Technology
Standard	ISO 9001 - TSE - LVD - EN 62040 -1 - EMC
INDICATORS	
LCD Panel	2 x 16 - 4 x 16 Line
PLC	S71200 - S7300
Otomation	Modbus / Profibus / ProfiNET / RS 232 / RS 485

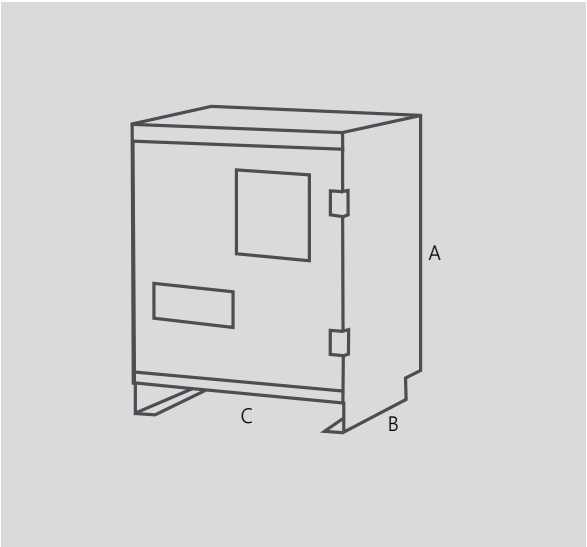

DIMENSIONS

CODE	A (mm)	B (mm)	C (mm)
MKL 1	340	240	150
MKL 2	340	240	200
MKL 3	290	260	370
MKL 4	340	280	400
MKL 5	400	320	450
MKL 6	580	390	500

OPTIONS

- DC +/- Ground Leakage Protection
- Modbus RTU Communication
- Individual Outputs for Battery and Load
- Deep Discharge Protection (LVD)
- Output Dropper Diode
- Additional Battery Fuse
- Temperature Comp. Battery Charge Voltage
- Power Fault Detection Dry Contact
- Battery Management, Test
- Rackmounted Chassis/Integrated Battery Racks / (IP31/IP42/IP54/IP65)
- Input Isolation Transformer / 6 Pulse Structure

MTT
SERIES

3 PHASE 12VDC: 50A-200A, 24VDC: 30A-300A
48VDC: 30A-150A, 110/220VDC: 30A-200A

1 PHASE 12/24VDC: 10A-300A, 36/48VDC: 10A-150A
110VDC: 10A-200A, 220VDC: 10A-100A

THRISTOR CONTROLLED BATTERY CHARGER

Usage Areas:

- Transformer Centers
- Vessels and Yachts
- Shipyards
- Rail Systems
- Solar Power Plants
- Automobile Services
- Electrical Devices
- Energy Generation
- Transmission and Distribution Centers
- Petroleum and Natural Gas Industry
- Mining Industry

HIGHLIGHTS

- Thyristor Controlled, Transformer System
- Full Automatic System
- Available for Using as DC Current Supply
- Adjustable Normal and Fast Charging Voltage
- Automatic Fast Charging Voltage Setting
- Excess/Low Voltage, Over Current, Short Circuit Protection

Thyristor Controlled Transformer Battery Charging Rectifier

- Transformer battery charging devices are AC/DC rectifiers with automatic constant voltage and constant current properties. They are offered with 6 and 16 pulse options depending on different application needs.

- Thyristor control regulation is extremely fast and battery voltage fluctuations in the network do not affect the system. Also provides complete protection against all types of user errors.

CERTIFICATES

12VDC: 50A-200A, 24VDC: 30A-300A, 48VDC: 30A-150A, 110/220VDC: 30A-200A 3 PHASE
12V/24VDC: 10A-300A, 36/48VDC: 10A-150A, 110VDC: 10A-200A, 220VDC: 10A-100A 1 PHASE

THRISTOR CONTROLLED BATTERY CHARGER

MODEL	
INPUT	
Input Phase	1 Phase - 2 Phase - 3 Phase (Special Design)
Input Voltage Tolerance	±10%
Input Frequency	50 - 60 Hz
Power Factor	0.85
THDi	<%20-30
OUTPUT	
Output Current	100A - 100.000A
Output Voltage	5-1000V
Ripple	6 Pulse %4, 12 Pulse %1
GENERAL	
Contacts	Dry Contact
Cooling	Thermostatic Controlled Fan Cooling, Water Cooling or Oil Cooling
Isolation Voltage	1500 VAC Input / Chassis Bridge, 500 VAC Output / Chassis Bridge, 500 VAC Between Input and Output
Insulation Class	IP 20 - RAL 7032 (Special Design)
Efficiency	85%
Operating Temperature	-20/50°C
Programmed Operation	Operation Depending on Requested Amount Value
Input / Output Connections	Thermic Magnetic Switch / Copper Bus Bar
PROTECTION	
Heat Protection	Input / Output Overtemperature Protection
Measure	Output Overcurrent Protection
TRANSFORMATOR	
Wrapping	Electrolytic Glass Insulated Copper Winding
Metal Sheet	10.000 Gauss Siliceous Sheet
INDICATORS	
LCD Panel	2 x 16 - 4 x 16 Line
PLC	S71200 - S7300
Otomation	Modbus / Profibus / ProfiNET / RS 232 / RS 485

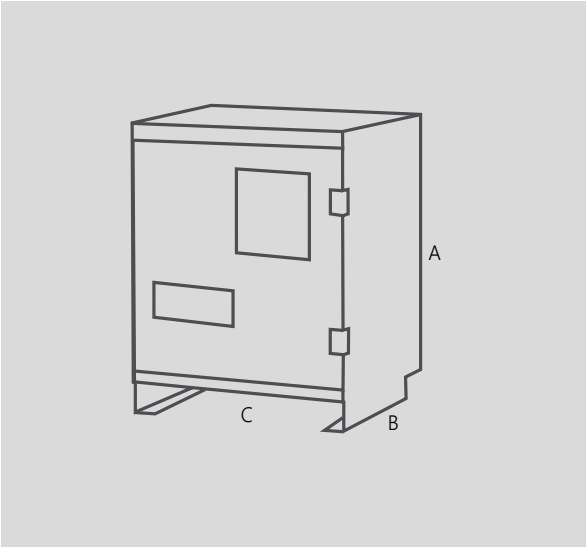

DIMENSIONS

CODE	A (mm)	B (mm)	C (mm)
MKL 1	340	240	150
MKL 2	340	240	200
MKL 3	290	260	370
MKL 4	340	280	400
MKL 5	400	320	450
MKL 6	580	390	500

OPTIONS

- Individual Outputs for Battery and Load
- Output Voltage Regulation with Dropper Circuit Depending on Load Voltage Tolerance
- Deep Discharge Inhibitor
- Additional LVD Contactor Separating Load and Battery from each other
- Battery Racks Integrated into the Rectifier
- Chassis's with Different Protection Class (IP31/IP42/IP54/IP65)
- DC +/- Ground Leakage Protection

ISOLATION TRANSFORMERS

SERIES

10-375 kVA 3 PHASE

1-10 kVA 1 PHASE

HIGHLIGHTS

- Reliable, Electrical Isolation
- Suppresses Electrical Noise
- Ensures Complete Safety of Equipment

Excellent Protection & High Level of Isolation

• An isolation transformer is the best way to establish a new neutral-ground bond, in order to correct common mode and other grounding problems.
• Isolation transformer provides excellent protection from all types of N-G disturbances (impulses, RMS voltage, and high frequency noise).
• Makelsan isolation transformers can be used reliably in following areas:
Medical devices, CNC machines, UPS systems, Ships and boats, Shipyards, Metal processing plants, Rectifier and battery chargers, Industrial machines power supply units

CERTIFICATES

ISOLATION TRANSFORMERS SERIES

10-375 kVA 3 PHASE 1-10 kVA 1 PHASE

FEATURES

- Standards : TS EN 61558-2-4
- Input Voltage : 230 VAC Ph+N / 400 VAC Ph-Ph (Three Phase)
  220 VAC Ph+N (Single Phase)
- Output Voltage : 230 VAC Ph+N / 400 VAC Ph-Ph (Three Phase)
  110 VAC Ph+N (Single Phase)
- Frequency : 50 - 60 Hz
- Windings : Aluminum or Copper Foil*
- Magnetic Circuit : 0,50 mm Transformer Steel w/ 1,8 W/kg Loss
- Connections : Star, Delta, Zig-Zag
- Protection Class : Standard**
- Isolation Class : Isolation Class B (120°C) (Standard)***
  Varnish Under Vacuum According to
  Isolation Class
- Cooling : Natural**
- Ambient Temparature : -10°C...+40°C
- Storage Conditions : -20°C...+70°C
- Connections : As Per to Customer Requirements:
  All Types of Terminals and Lugs

* 'Copper Foil' or 'Enameled Copper Wire' can be used upon request.
** Can be changed upon request.
*** Can be produced in F (155°C) or H (180°C) classes upon request.

THREE PHASE ISOLATION TRANSFORMERS					
Power	Model Code	Chassis Dims (WxHxD)	Chassis Weight	Connection	Wire
10kVA	MTIC010HV1	667 x 768 x 330	110	Y - Y	COPPER
10kVA	MTIC010HV4	883 x 1048 x 431	172	Y - Y	ALUMINIUM
10kVA	MTIC010HV5	805 x 700 x 665	231	Δ - Y	COPPER
12kVA	MTIC012HV1	650 x 370 x 564	115	Y - Y	ALUMINIUM
15kVA	MTIC015HV1	800 x 800 x 647	170	Y - Y	ALUMINIUM
18kVA	MTIC018HV1	800 x 800 x 647	180	Y - Y	ALUMINIUM
20kVA	MTIC020HV1	805 x 700 x 665	190	Y - Y	ALUMINIUM
24kVA	MTIC024HV1	600 x 700 x 638	200	Y - Y	ALUMINIUM
30kVA	MTIC030HV1	800 x 800 x 647	230	Y - Y	COPPER
30kVA	MTIC030HV2	883 x 1048 x 431	247	Δ - Y	COPPER
30kVA	MTIC030HV4	625 x 800 x 495	210	Y - Y	ALUMINIUM
30kVA	MTIC030HV5	805 x 700 x 665	234	Y - Y	ALUMINIUM
36kVA	MTIC036HV1	600 x 700 x 638	157	Y - Y	ALUMINIUM
40kVA	MTIC040HV1	800 x 800 x 647	285	Y - Y	ALUMINIUM
45kVA	MTIC045HV1	800 x 800 x 647	289	Y - Y	ALUMINIUM
60kVA	MTIC060HV1	800 x 800 x 647	355	Y - Y	COPPER
60kVA	MTIC060HV4	883 x 1048 x 431	357	Δ - Y	COPPER
60kVA	MTIC060HV5	800 x 800 x 647	339	Y - Y	ALUMINIUM
72kVA	MTIC072HV1	905 x 874 x 792	320	Y - Y	ALUMINIUM
80kVA	MTIC080HV1	905 x 1000 x 792	400	Y - Y	ALUMINIUM
150kVA	MTIC150HV4	906 x 1000 x 792	530	Y - Y	ALUMINIUM
180kVA	MTIC180HV1	1120 x 1000 x 842	589	Y - Y	ALUMINIUM
250kVA	MTIC250HV3	1120 x 1000 x 842	765	Y - Y	ALUMINIUM
300kVA	MTIC300HV2	976 x 1005 x 655	806	Y - Y	ALUMINIUM
375kVA	MTIC375HV1	1200 x 1100 x 800	1083	Y - Y	ALUMINIUM
ONE PHASE ISOLATION TRANSFORMERS					
2kVA	MTIC002HV2	312 x 341 x 295	24	1 Phase	ALUMINIUM
6kVA	MTIC006HV1	625 x 800 x 495	75	1 Phase	ALUMINIUM
10kVA	MTIC007HV2	625 x 800 x 495	105	1 Phase	ALUMINIUM

6-FM
SERIES

12V 4.5Ah-200Ah
AGM VRLA BATTERY

FEATURES

- AGM-VRLA (Valve Regulated Lead Acid) 12V
- Ease of Shipment
- Maintenance Free Operation
- Cycle or Float Service
- Heavy Duty Grids
- Compact Design
- Low Self Discharge
- Wide Operating Temperature
- High Impact Case
- 10 yrs Design Life
- EUROBAT (Optional)

APPLICATIONS

- Uninterruptible Power Supplies
- Emergency Lighting Systems
- Test and Measuring Instruments
- Telephone Switchboards
- Cable Televisions
- Communications Equipment
- Fire Alarm Systems
- Railways
- Vessels and Traffic
- Electronic Cash Register
- Telecommunications Systems
- Electronic Devices
- Electric Toys and Wheelchairs
- ATM Machines
- Maritime Equipment
- Solar Energy Systems
- Wind Energy Systems

Model	Nominal Voltage	Capacity	Lenght	Width	Height	Total Height	Weight	Terminal
6-FM-4.5	12	4.5Ah	90mm (3.54in)	70mm (2.76in)	101mm (3.98in)	107mm (4.21in)	1.48kg (3.20lbs)	T1
6-FM-6	12	6Ah	90mm (3.54in)	70mm (2.76in)	101mm (3.98in)	107mm (4.21in)	1.88kg (4.15lbs)	T1
6-FM-7	12	7Ah	151mm (5.94in)	65mm (2.54in)	93.5mm (3.68in)	99mm (3.90in)	2.18kg (4.81lbs)	T2
6-FM-9	12	9Ah	151mm (5.94in)	65mm (2.54in)	93.5mm (3.68in)	99mm (3.90in)	2.45kg (5.40lbs)	T2
6-FM-10	12	10Ah	151mm (5.94in)	98mm (3.86in)	95mm (3.74in)	101mm (3.98in)	3.25kg (7.17lbs)	T2
6-FM-12	12	12Ah	151mm (5.94in)	98mm (3.86in)	95mm (3.74in)	101mm (3.98in)	3.5kg (7.72lbs)	T2
6-FM-17	12	17Ah	181.5mm (7.15in)	77mm (3.03in)	167.5mm (6.59in)	167.5mm (6.59in)	4.7kg (10.4lbs)	T3
6-FM-18	12	18Ah	181.5mm (7.15in)	77mm (3.03in)	167.5mm (6.59in)	167.5mm (6.59in)	5.4kg (11.9lbs)	T3
6-FM-24	12	24Ah	166mm (6.54in)	175mm (6.89in)	125mm (4.92in)	125mm (4.92in)	7.2kg (15.9lbs)	T3
6-FM-38	12	38Ah	197mm (7.76in)	165mm (6.50in)	170mm (6.69in)	170mm (6.69in)	12.2kg (26.9lbs)	T6
6-FM-50	12	50Ah	257mm (10.1in)	132mm (5.19in)	200mm (7.87in)	200mm (7.87in)	16kg (35.3lbs)	T6
6-FM-65	12	65Ah	348mm (13.7in)	167mm (6.57in)	178mm (7.01in)	178mm (7.01in)	19.2kg (42.3lbs)	T6
6-FM-80	12	80Ah	260mm (10.2in)	168mm (6.61in)	208mm (8.19in)	214mm (8.43in)	24kg (52.9lbs)	T6
6-FM-100	12	100Ah	330mm (13.0in)	173mm (6.81in)	212mm (8.35in)	220mm (8.66in)	30.4kg (67lbs)	T11
6-FM-120	12	120Ah	408mm (16.1in)	177mm (6.97in)	225mm (8.86in)	225mm (8.86in)	35kg (77.2lbs)	T11
6-FM-150	12	150Ah	483mm (19.1in)	170mm (6.69in)	238.5mm (9.39in)	239mm (9.40in)	43.2kg (95.9lbs)	T11
6-FM-200	12	200Ah	522mm (20.6in)	240mm (9.45in)	218mm (8.58in)	224mm (8.82in)	59.8kg (132.7lbs)	T11

CERTIFICATES

ACCESSORIES

ADVANCED COMMUNICATION CAPABILITIES

Makelsan UPS's wide range of advanced remote communication options. Remote control management of the UPS is provided over the Network and enables centralized management via the MAKNet Software.

MakNET UPS Management Software

MakNET UPS-Management Software is a collection of client/server modules for networks and local workstations for monitoring the status of system resources and managing operations in response to changing conditions. When MakNET begins, it collects the messages sent from the UPS and analyses received messages to notify the administrator/operator. Grafically all the MakNET actions can be monitored.

If MakNET detects voltage variations, power loss or any other UPS condition, it can respond with a wide variety of actions to each different event, which for example may shutdown the server or send warnings and emails to connected users. The user can alter the configuration in respects to network messaging, sending of email or SMS, RCCMD (Remote Console Command) shutdown, etc.

- Every MakNET includes an RCCMD Server ("Remote Console Command") to provide a simultaneous and secure shutdown of several servers and/or workstations on almost any platform.
- More than 12 languages are supported.
- MakNET for Windows XP/VISTA Business/2000//2003 Server/2008 Server/Windows 7, Novell NetWare and UNIX have an SNMP proxy agent, which translates all UPS data into SNMP format.
- Every MakNET comes with its own web-server, that allows the monitoring or configuration from remote using any standard web-browser.
- MakNET runs also on less widely spread platforms like DEC VMS/Compaq and APPLE MAC X - and of course, inside the CS121 Web Adapter.

MakNET SNMP Card

MakNET SNMP Card was developed to integrate the UPS into networks. It allows control and monitoring of multiple UPS's using the TCP/IP, HTTP and SNMP.

- Compatible with MakNET software.
- Events log and data management
- Management of environmental sensors
- Warning notifications via audible alarm, email and SMS.

Dry Contact Card

A "dry" contact is a contact that is not initially connected to a voltage source and provides isolated, dry contact signals that can indicate any failure of UPS. Relay contacts are totally isolated from UPS and Ground. All isolated contacts can operate between 3.3Vdc - 24Vdc. UPS can be controlled remotely with help of the isolated contacts and via other devices.

RS232, RS485 Serial Port

UPS input-output parameters can be observed and controlled with RS232 and 485 communication port and MAKNet software. MAKnet software reports all changes in UPS status by email; also all operating systems can be safely turned off through the network.

External Battery Temperature Sensor

R336-R01A module is mounted on battery cabinet. Altogether with information about the temperature of the batteries inside the cabin, it also forwards the information about the position of the key on the cabin. A single card of this type is needed for each cabin.

Data Expansion Card

R326-R01A module is directly connected to one of two expanding slots of UPS. The main duty of this module is to collect information from other battery cabins. Here, in physical intercommunication environment CAN works with MAKBUS protocol.

Remote Panel

The UPS Remote Panel is intended to help the user to observe the operational status of the UPS from a distant place. The user can be informed about status of all operations, events and parameters of the working UPS through the LCD screen of remote panel.

GENERATOR
SOLUTIONS

22-2500 kVA
GENERATOR

HIGHLIGHTS

- Easily Dismountable Chassis
- Low Amortization
- Easy Maintenance Canopy Design
- Economic and Long Life

High Tech and Reliable Solutions for Power Generating

• Makelsan provides tailormade power generators accordingly to customer needs as well as serving with a wide range of generators starting from 22kVA to 2500kVA. High quality Makelsan generator sets approved with international quality certifications which are made of world's top engine brands coupled to well know alternators to meet projects' requirements of different output ranges.

Diesel Engine Brand Options

DEUTZ, DONGFENG, WEICHAI, mtu, MAN, VOLVO PENTA, IVECO, SCANIA, Baudouin, Perkins, LOVOL

Engine

- Heavy Duty Diesel Engine
- 4 Cycle, Water Cooled, Naturally Aspirated
- Indirect Injection
- Mechanic / Rotary Type Pump
- 12/24 Volt Self-Starter and Charger Alternator
- Changeable Air, Fuel and Oil Filter
- Tropical Type Radiator
- Flexible Fuel Pipe
- Oil Discharge Valve And Extention Pipe
- Industrial Type Silencer, Exhaust Spiral or Compensator
- Maintenance Free Battery
- Engine Block Water Heater (In Automatic Models)
- Diesel Gen-Set Maintenance and Operating Instructions and Electrical Circuit Diagram

Quality Standard

Our gen-sets; VDE 0530, BS 4999, BS 5000, IEC 34, TS ISO 8528, TS EN 12601 are manufactured in accordance with the standards mentioned above. Our company fulfills ISO 9001:2008, ISO 14001:2004, OHSAS 18001:2007 management system requirements, and have the accredited certificates of Kiwa & MEYER. Also we've GOST-R certificate. Our gen-sets have TS ISO 8528-5, TS EN 12601 product standard certificates.
Our gen-sets are CE certified in accordance with the requirements of 2000/14/EC, noise emission directive.

Alternator

- Brushless, Single Bearing, Flexible Disc 4 Poles Alternator for Harmonic Failure
- H Type Isolation Class
- IP 21-23 Protection Class
- Self Exciter
- Electronic Automatic Voltage Regulator
- Stator 2/3 Step for Harmonic Failure

Extra Equipments

- Charge Ammeter
- Moulded Case Circuit Braker (In Automatic Models)
- Hospital/Critical Type Silencer
- Sound-Proof Canopy
- Mobile-Trailer
- Synchronization Control Panel for 2-6 Gen-Sets
- 3 Pole/4 Pole Automatic Transfer Panel (A.T.S.)
- Fuel and Oil Heater
- Alternator Heater
- Automatic Fuel Filling System
- Fuel-Water Seperator Filter

Canopy

- Modular Type Sound-Proof Canopy
- Canopy Installation Executed with Screw and Nut, without Welding Process
- Epoxy and Polyester Powder Painted Canopy
- Canopy Designed for Easy Maintenance
- Lockable Doors on Both Sides of Canopy
- Emergency Stop Button
- Transparent Panel Inspection Window

Automatic Control Panel

- LCD Display Screen
- Battery Charger
- Hardware and Materials Needed
- USB Port & RS-485 Output

Gen-Set Safety Protection & Alarms

- High Water Temperature
- Low Oil Pressure
- High & Low Engine Speed
- Low Radiator Water Level
- Over Current Load
- High & Low Gen-Set Voltage
- Start/Stop Failure

Domestic production contributing to the country's economy

Easy maintenance canopy design

Refilling from the outside of the canopy

Canopy made of galvanized steel

Warning system for decreasing fuel with electronic fuel level sender

UPS suitable for
home-small office applications

UPS suitable for
data centre applications

UPS suitable for
electro-medical applications

UPS suitable for
industrial applications

UPS suitable for
transport applications
(railways, airports, naval)

UPS suitable for
emergency applications

Containerised Power Systems
suitable for Outdoor/Marine/Offshore
AC&DC Power Systems

1 PHASE — Single-phase input or output

3 PHASE — Three-phase input or output

1:1 PHASE — Single-phase input and output

3:1 PHASE — Three-phase input,
single-phase output

3:3 PHASE — Three-phase input and output

VFD TYPE — UPS VFD
(Voltage Frequency Dependent)

VI TYPE — UPS Line Interactive
(Voltage Independent)

VFI TYPE — UPS Online
(Voltage Frequency Independent)

UPS Rotary Type

Tower

Rack

Reversible (Rack/Tower)

Modular System

PLUG & LAY — Plug and play. The UPS can be
installed without the need for
qualified personnel

Service — Installation and initial start up
should be carried out by qualified
personnel

PF= 0.9 — PF=0.9
High Output Power Factor

PF= 1.0 — PF=1.0
High Output Power Factor

Three LEVEL UPS 3 — UPS with three level rectifier
and inverter technology

kW=kVA — Output power factor
of 1 (kVA=kW)

96% Efficiency — High efficiency up to 96%

97% Efficiency — High efficiency up to 97%

Notes

Notes

MAKELSAN®

Uninterruptible Power Supplies

www.makelsanups.com

HEADQUARTER & FACTORY

Makelsan Makine Kimya Elektrik San. ve Tic. A.Ş.
Istanbul Deri Organize Sanayi Bölgesi Alsancak Sk. No: 8/A
I-5 Özel Parsel, 34956 Tuzla - Istanbul
T : +90 (216) 428 65 80 F : +90 (216) 327 51 64
E : makelsan@makelsan.com.tr

DISTRIBUTOR

ANKARA

Mustafa Kemal Mah. 2157 Sk.
No: 4/6, Çankaya-Ankara
T : +90 (312) 219 82 35/37
F : +90 (312) 219 82 36
E : ankara@makelsan.com.tr

IZMIR

Halkapınar Mah. 1348 Sk. 2AE
Keremoğlu Iş Merkezi, Yenişehir-Izmir
T : +90 (232) 469 47 00
F : +90 (232) 449 47 00
E : izmir@makelsan.com.tr

UNITED KINGDOM

Atterbury Lakes, Fairbourne
Drive, Atterbury, Milton Keynes
Bucks. MK10 9RG
T : +44 (0) 20 3126 4904
E : sales@makpower.co.uk

RUSSIA

Krandshtatski b-r 35B(Б)
Moscow
T : +8 (495) 255 03 39
E : info@makelsan.ru

Follow us on

/makelsan /makelsan_ups /makelsan_ups /makelsan ups

POWER FORLIFE